PLASTIC FLOW METER

VF350 *with alarm switch type*
without alarm switch type



CE

Technical Data

Service: Liquid, Air
Wetted parts material:
Body: Polycarbonate (P.C); Polysulfone (PSU) available
O-ring: Viton
Float: SS316
Connection: SS316
Connection size: ¾", 1"NPT female available
Mounting: Vertical position
Max. wroking pressure limit: 1.2 MPa (12 kg/cm²)
Max. test pressure: 2.0 MPa (20 kg/cm²) (water 25°C)
Max. working temperature limit: -10°C to 60°C (for PC body)
-10°C to 80°C (for PSU body)
Accuracy: ±5% full scale
Alarm switch: One setting points, form A N.O. type bistable reed switch
Switch rating: AC 125V 0.5A / DC 100V 10W / Max. DC 250V < 1mA
Weight: 0.45~0.5 kg
(Contact setting point should be within 10% to 80% of FS)

Dimensions

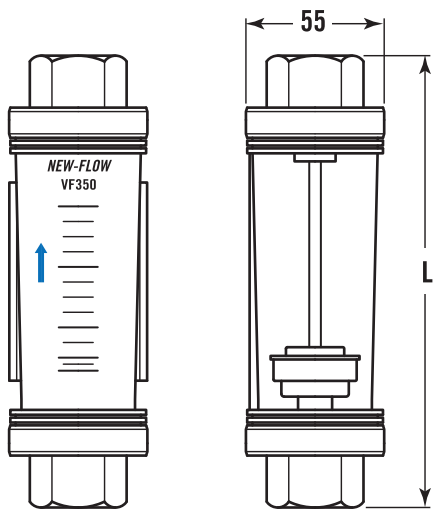

unit=mm

Flow Direction Types



Ordering Information

VF350	Code	Flow Range
	A	Air, 100~600 LPM (Litter per Minute)
	B	Water, 200~1000 LPH (Litter per Hour)

Code	Alarm Switch
1R	One setting point
0	Without alarm

Code	Body Material
PC	Polycarbonate
PSU	Polysulfone

Code	Connection Material
1	SS316

Code	Process Connection in Female
A	¾"NPT (L=170mm)
B	1"NPT (L=170mm)

Code	Flow Direction
BT	Bottom to Top

SF350							Complete ordering code

WWW.NEW-FLOW.DE | Tel: +49 3682 49099 | Fax: +49 3682 49093 | E-Mail: info@mess-regel.de