PLASTIC FLOW METER

VF300 *with alarm switch type*
without alarm switch type



Technical Data

Service: Water, Air
Wetted parts material:
Body: Polycarbonate (P.C); Polysulfone (PSU) available
O-ring: Viton
Float: magnet cover with PPS Plastic
Connection: SS316
Connection size: 3/8", 1/2", 3/4"NPT female available
Mounting: Vertical position
Max. wroking pressure limit: 1.2 MPa (12 kg/cm²)
Max. test pressure: 2.0 MPa (20 kg/cm²) (water 25°C)
Max. working temperature limit: -10°C to 60°C (for PC body)
-10°C to 80°C (for PSU body)
Accuracy: ±5% full scale
Alarm switch: One or Two setting points, form A N.O. type bistable reed switch
Switch rating: AC 125V 0.5A / DC 100V 10W / Max. DC 250V < 1mA
Weight: 0.3~0.4 kg
(Contact setting point should be within 10% to 80% of FS)

Dimensions

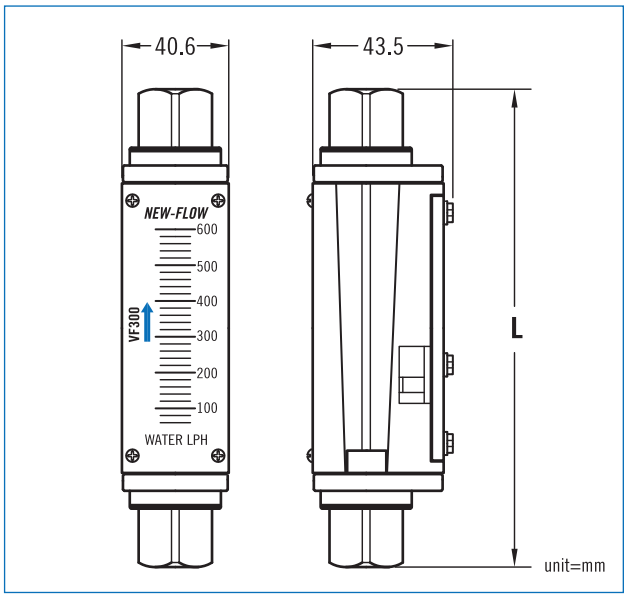

Flow Direction Types

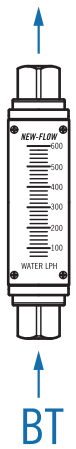

Ordering Information

VF300	Code	Flow Range
	A-1	Water (LPH- Litter per Hour)
		(1) 5~50 **(2)** 6~60 **(3)** 12~120 **(4)** 20~200 **(5)** 30~300 **(6)** 60~600
	A-2	Water (LPM- Litter per Minute)
		(6) 0.1~1 **(7)** 0.2~2 **(8)** 0.3~3 **(9)** 0.5~5 **(10)** 1~10
	B	Air (LPM- Normal Litter per Minute)
		(11) 3~30 **(12)** 6~60 **(13)** 12~120 **(14)** 18~180 **(15)** 40~400

Code	Alarm Switch
1R	One setting point
2R	Two setting points
0	Without alarm

Code	Body Material
PC	Polycarbonate
PSU	Polysulfone

Code	Connectoin Material
1	SS316

Code	Process Connection in Female
A	3/8"NPT (L=150mm)
B	1/2"NPT (L=150mm)
C	3/4"NPT (L=150mm)

Code	Flow Direction
BT	Bottom to Top

VF300							Complete ordering code

WWW.NEW-FLOW.DE | Tel: +49 3682 49099 | Fax: +49 3682 49093 | E-Mail: info@mess-regel.de