FIELD MOUNTED TEMPERATURE TRANSMITTER WITH DISPLAY T-1000

Explosion Proof
CLASS I, GROUPS A, B, C & D,
CLASS II, GROUPS E, F & G
NEMA 4X



Technical Data

Enclosure housing: Aluminum or SS316
Input: Programmable for thermocouple type K, J, R, S, T, N, E, B and RTD pt 100Ω from a PC
Working span range: Programmable from a PC
LCD display: 5 digital **(Only Positive digital)**
Output: Linearized 4 to 20mA
Accuracy: pt 100Ω and 0 to 50mV ±0.15% full scale
Thermocouple ±0.25% full scale
Ambient temperature: -40 to +85°C (-40 to 185°F)
Power supply: 12 to 35 VDC
Sensor failure protection: Programmable burnout upscale or downscale
Sensor connection: ½", ¾" available
Conduit connection: ¾"NPT Female

Range Table

Sensor Type	Range	Minimum Measurement Span
Thermocouple K	-50~1370°C	50°C
Thermocouple J	-50~1000°C	50°C
Thermocouple R	-50~1750°C	100°C
Thermocouple S	-50~1750°C	100°C
Thermocouple T	-270~400°C	50°C
Thermocouple N	-50~1300°C	50°C
Thermocouple E	-50~960°C	50°C
Thermocouple B	0~1750°C	100°C
PT100	-200~600°C	20°C
Voltage	-10~+10 Vdc	5mV

Dimensions

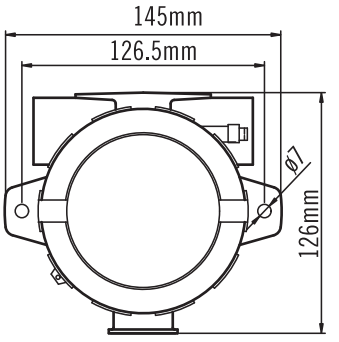

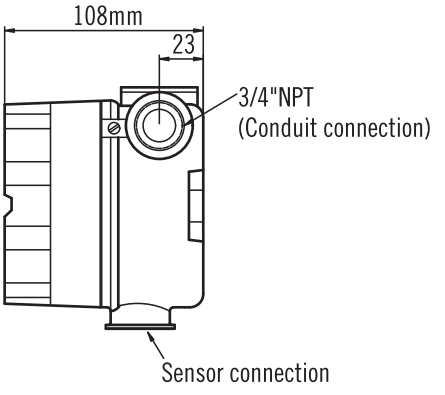

Ordering Information

T1000	Code	Sensor Type
		(1) K (2) J (3) R (4) S (5) T (6) N (7) E (8) B (9) PT100 (10) Voltage

Code	Measuring Range
	Please fill in the requested measurement range.

Code	Output
A	4~20 mA

Code	Sensor Connection
	(A) ½"NPT (B) ¾"NPT (O) option

T1000					Complete Ordering Code

WWW.NEW-FLOW.DE | Tel: +49 3682 49099 | Fax: +49 3682 49093 | E-Mail: info@mess-regel.de