SYPHON SU SERIES



Technical Data

Material: SS316, SS304 available
Pipe Rating: SCh40S, SCh80S available

Working Pressure & Temperature

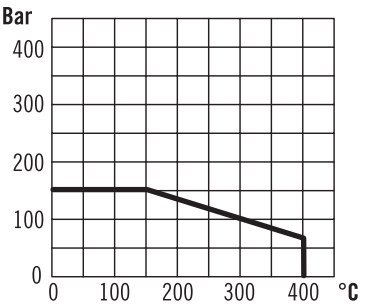

Tube Table

Tube / Material	Max. Temp. (°C)	Max. Press. (Bar)
SCh 40 / SS316	80	250
	120	160
	300	100
	400	80
SCh 80 / SS316	80	300
	120	300
	300	160
	400	100
SCh 100 / SS316	80	400
	120	400
	300	250
	400	160

Dimensions

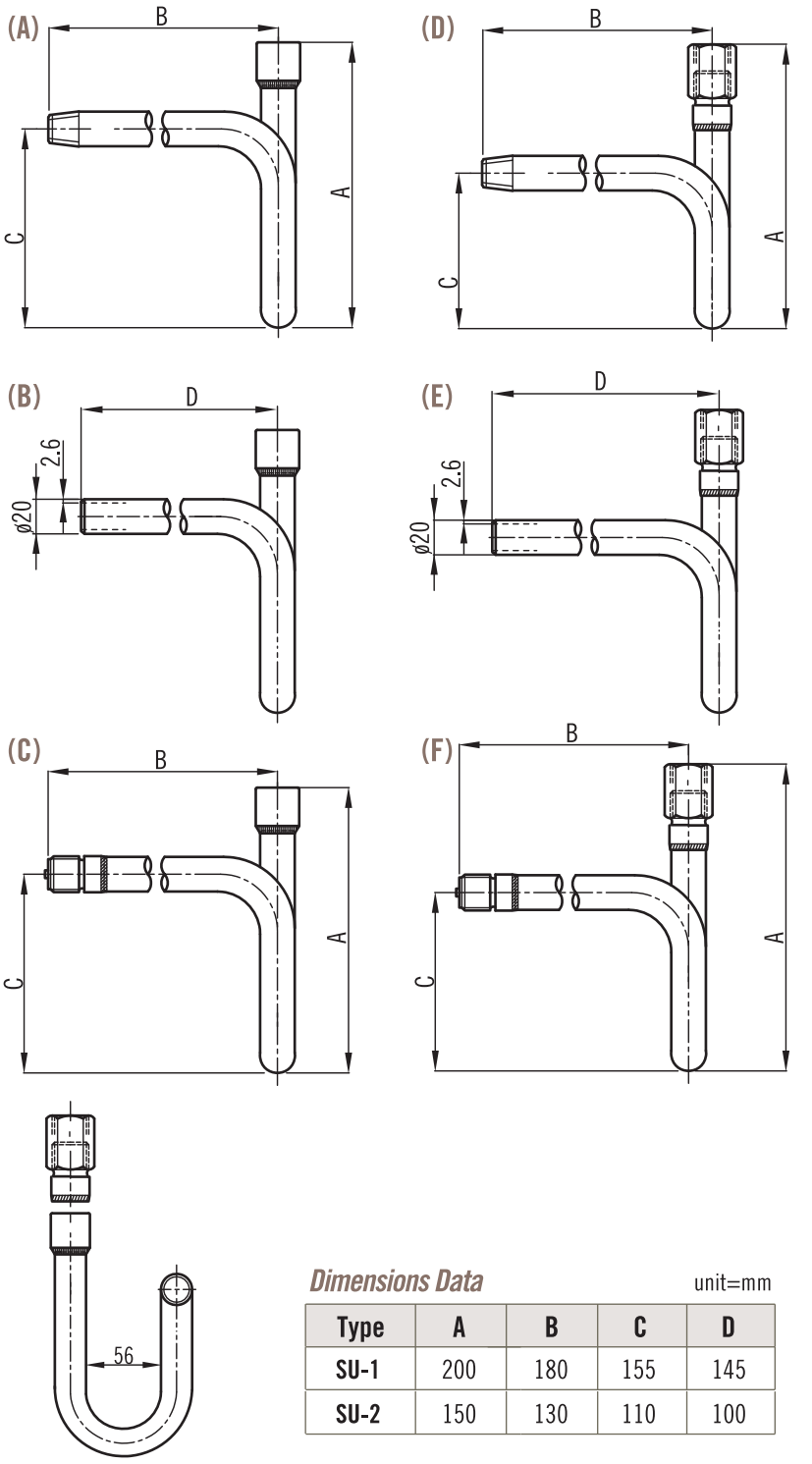

Dimensions Data

unit=mm

Type	A	B	C	D
SU-1	200	180	155	145
SU-2	150	130	110	100

Ordering Information

SU-1 / SU-2	Code	Type / Connection Figure					
		A	B	C	D	E	F
		Option	other type please contact manufacturer directly				
			Complete Ordering Code				

WWW.NEW-FLOW.DE | Tel: +49 3682 49099 | Fax: +49 3682 49093 | E-Mail: info@mess-regel.de