FILLED TYPE THERMOMETERS

SM4/SA4(ø100) & SM6/SA6(ø150)

Technical Data

Remot mounting type
Material of case & cover: 316 stainless steel, option available
Material of sensor bulb capillary tube, flex tube: SS304, SS316, and others available
Lens: Glass, safety glass available
Temp range: -200~+650℃ available
Housing enclosure: IP65, liquid filled available
Accuracy: ±1% (FS)
Capillary tube length limited:
liquid filled type: 10M
gas filled type: max. 50M
option available
Stem dimensions: ∅ 6, 8, 10, 12mm available
Process connection: 1/2"NPT standard, other available
Over range protection: 130% F.S.
Contact type limit switch: available, 7 functions for usage.



SM TYPE
(Wall mounting)



SA TYPE
(Panel mounting)

Dimensions

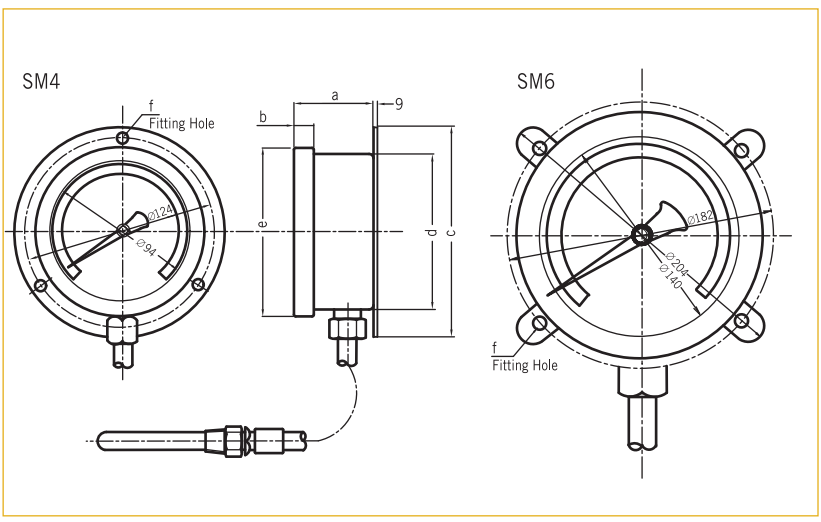

Symbol / Model	a	b	c	d	e	f
SM4	51	13	138	103	113	3-ø5.5
SM6	52	15	204	153	165	4-ø8

*Sensor bulb and connection consult to factory.
*Remote capillary length:
Maximum length: 50M

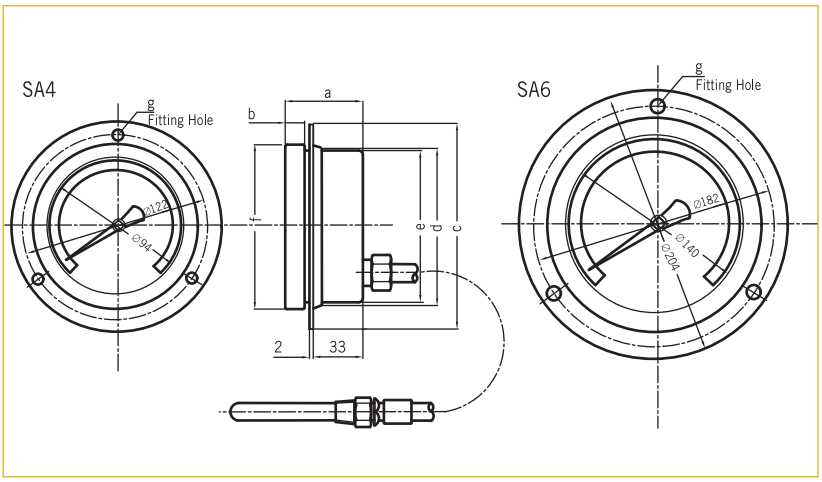

Symbol / Model	a	b	c	d	e	f	g
SA4	54	13	134	107	102	113	3-ø5.5
SA6	54	15	200	153	153	165	3-ø7

*Sensor bulb and connection consult to factory.
*Remote capillary length:
Maximum length: 50M

unit=■■

WWW.NEW-FLOW.DE | Tel: +49 3682 49099 | Fax: +49 3682 49093 | E-Mail: info@mess-regel.de

Connection Type

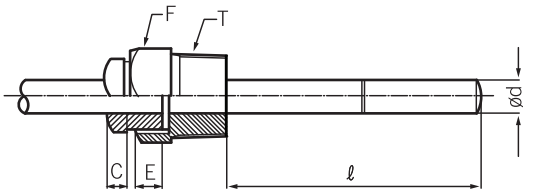

(A) Rotary Thread Type

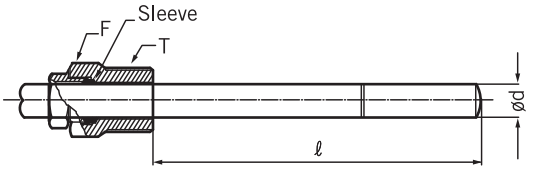

(B) Slide Thread Type
(Length "ℓ" changed available.)

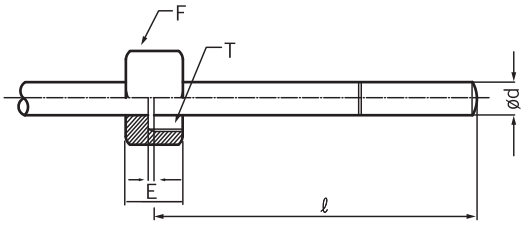

(C) Female Thread Type
(Rotation Style)

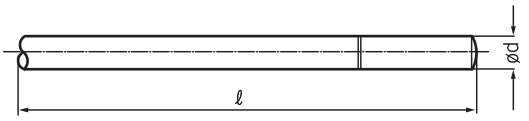

(D) Non Thread Type

T: Process connection
E: Stop plate for (rotary & rotation style)
F: Hexagonal head
ℓ: Sensor length
d: Sensor dimension

Table for Range and Insertion

LIQUID FILLED TYPE

Standard Scale Range (°C)	Minor Division (°C)		Minimum Insertion Length (mm)			
			Outer Diameter of Stem			
	Ø100	Ø150	Ø6	Ø8	Ø10	Ø12
-30~+50	1	1	135	91	53	37
-30~+100	2	2	89	61	38	28
-10~+50	1	1	175	116	66	45
-10~+100	2	2	102	70	42	31
0~50	1	1	207	137	76	52
0~80	1	1	135	91	53	37
0~100	1	1	111	75	45	33
0~120	2	2	95	65	40	29
0~150	2	2	79	55	34	26
0~200	2	2	63	44	29	23
0~250	5	5	53	38	26	21
0~300	5	5	47	34	24	20
0~400	5	5	39	29	21	18

GAS FILLED TYPE

Standard Scale Range (°C)	Minor Division (°C)	
	Ø100	Ø150
-200~+50	5	5
-200~+100	5	5
-200~+150	5	5
-200~+200	5	5
-100~+100	2	2
-100~+150	5	5
-100~+200	5	5
-50~+300	5	5
-50~+400	5	5
-50~+500	10	10
-50~+600	10	10
0~400	5	5
0~500	10	10
0~600	10	10

Minimum Stem Length		
mm \ Ød	Ø10	Ø12
Minimum length	270	200

OPTION.

1. Please note the minimum insertion length is not including the thread.
2. Special Range / Scale / Stem Diameter / Length are available upon request.

WWW.NEW-FLOW.DE | Tel: +49 3682 49099 | Fax: +49 3682 49093 | E-Mail: info@mess-regel.de

Contact Type Limit Switch Assemblies



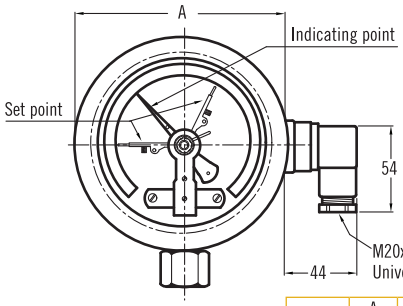

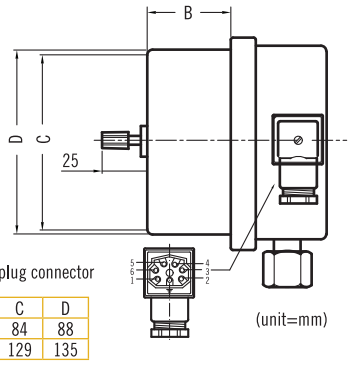

	A	B	C	D
ø100	114	35	84	88
ø150	165	42	129	135

(unit=mm)

Limit Switch Contact Rating

CONTACT MODE	SL-SERIES SLIDING CONTACT				MS-SERIES MAGNETIC SNAP CONTACT			
VOLTAGE	AC 220V	AC 110V	DC 200V	DC 100V	AC 220V	AC 110V	DC 200V	DC 100V
LOADING CURRENT	0.2A	0.4A	0.01A	0.02A	0.2A	0.4A	0.01A	0.02A

LIMIT SWITCH FUNCTION MODE		
WIRE DRAWING	CONTACT FUNCTION	CONTACT TYPE
	SINGLE CONTACT	**MAGNETIC SNAP-ACTION**
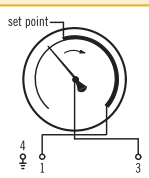	Contact ON When pointer clockwise reaches and passed set point.	MS1
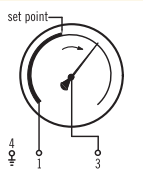	Contact OFF When pointer clockwise reaches and passed set point.	MS2
TWO CONTACTS		
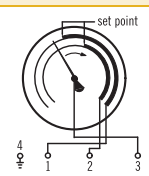	Common pole: 4 1st and 2nd contact ON When pointer clockwise reaches and passed each set point.	MS11
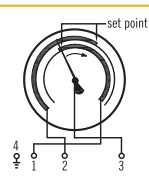	Common pole: 4 1st contact ON 2nd contact OFF When pointer clockwise reaches and passed each set point.	MS12
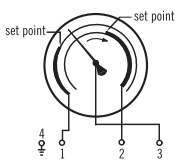	Common pole: 4 1st contact OFF 2nd contact ON When pointer clockwise reaches and passed each set point.	MS21
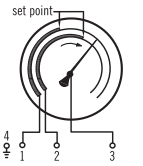	Common pole: 4 1st and 2nd contact OFF When pointer clockwise reaches and passed each set point.	MS22
SPDT CONTACT		
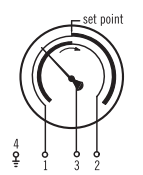	Common pole: 4 Connection 1 and 4: ON Connection 2 and 4: OFF When pointer clockwise reaches and passed set point meanwhile contacts change over at same set point.	MS3

WWW.NEW-FLOW.DE | Tel: +49 3682 49099 | Fax: +49 3682 49093 | E-Mail: info@mess-regel.de

Ordering Information

Model	SM4 (ø100)	SM6 (ø150)	SA4(ø100)	SA6(ø150)

Code	Lens Material		
G	Glass	S	Safety Glass

Code	Connection Type				
A	Rotary Thread Type	C	Female Thread Type	O	Option
B	Slide Thread Type	D	Non Thread Type		

Code	Capillary Length
	Please fill in the requested length. (e.g. 3M)

Code	Stem Diameter
	(1) ø6 (2) ø8 (3)ø10 (4)ø12

Code	Stem Length
	Refer to the Table for Range and Insertion, directly fill in request length (mm)

Code	Process Connection
	(A) 3/8" NPT (B) 1/2" NPT (C) 1/4" NPT (D) 3/8"PF (E) 1/2"PF (F)1/4"PF (O) Option

Code	Scale Range
	Refer to the Scale Range Table. Fill in the request range.

Code	Contact Type Limit Switch
	Please refer to limit switch function mode, or (O) for without limit switch.

									Complete ordering code

Ordering information Sample:

Model	Lens Material	Connection Type	Capillary Length	Stem Diameter	Stem Length	Process Connection	Scale Range	Contact Type Limit Switch
SM4	S	A	3M	ø6	100mm	B	0-100℃	SL1

WWW.NEW-FLOW.DE | Tel: +49 3682 49099 | Fax: +49 3682 49093 | E-Mail: info@mess-regel.de