ORIFICE FLANGES AND ORIFICE PLATE

All the NEW-FLOW orifice unions are manufactured according to the software by Flow Soft inc. The following is a list of commonly used standards and references used in flow measurement calculations:

– Flow Measurement Engineering Handbook. 2nd edition. R.W. Miller.
– Principles and practice of Flow Meter Engineering. 9th edition. L.K. Spink.
– Fluid Meters, Their Theory and Application. 6th edition, Howard S. Bean.
– Measurement of Fluid Flow in Pipes Using Orifice, Nozzle, and Venturi, ASME MFC-3M-1985.
– Measurement of fluid flow by means of pressure differential devices-Orifice plates, inserted in circular cross section conduits running full, ISO 5167-2-2003.
– Orifice Metering of Natural Gas and Other Related Hydrocarbon Fluids, AGA Report 3, API 2000,2003.





Technical Data

Orifice Plate Series: Restriction plate. Concentric orifice plate.
Quadrant edge orifice plate.
Conical entrance orifice plate. Large and small orifice plate.
Eccentric orifice plate. Segmental orifice plate. Ring-joint orifice plate.
Screw type ring-joint orifice plate. Corner type plate.

Orifice Tap Series: (a) flange taps. radius or D-D/2 taps, vena contract taps. and pipe taps.
(b) corner tap-individual pressure tap and annular slot design.

Orifice Flange Series: 1. Raised face (RF type) 2. Ring-Joint (RJ type) 3. Slip-on (SO type) 4.Thread type

PADDLE TYPE ORIFICE PLATE

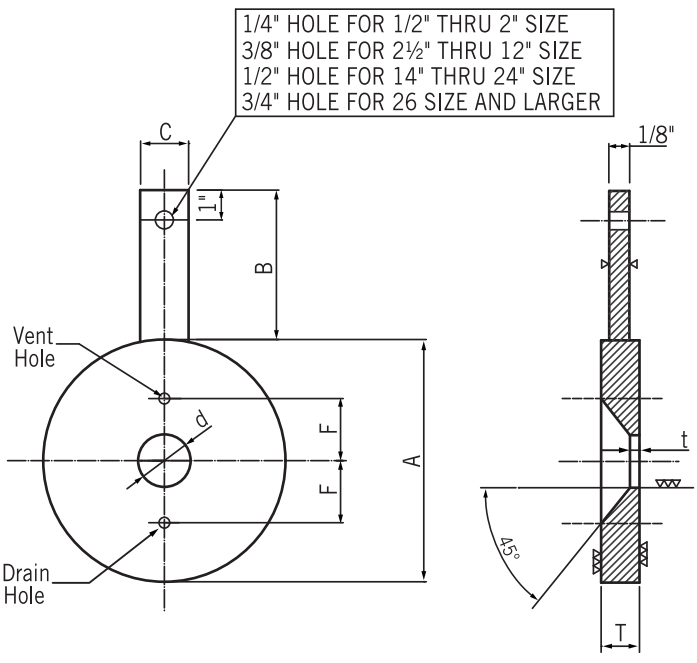

Concentric Orifice Plate

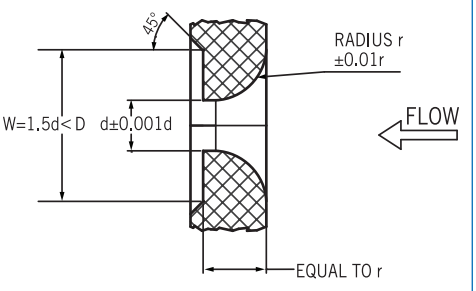

Quadrant Edge Orifice Plate

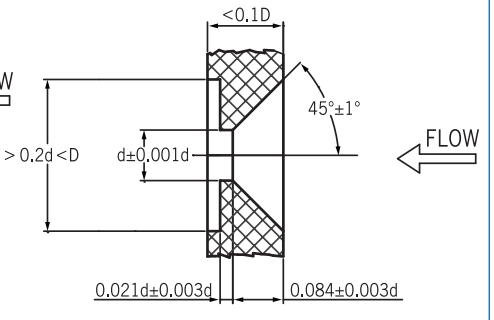

Conical Entrance Orifice Plate

WWW.NEW-FLOW.DE | Tel: +49 3682 49099 | Fax: +49 3682 49093 | E-Mail: info@mess-regel.de

PADDLE TYPE RESTRICTION PLATE

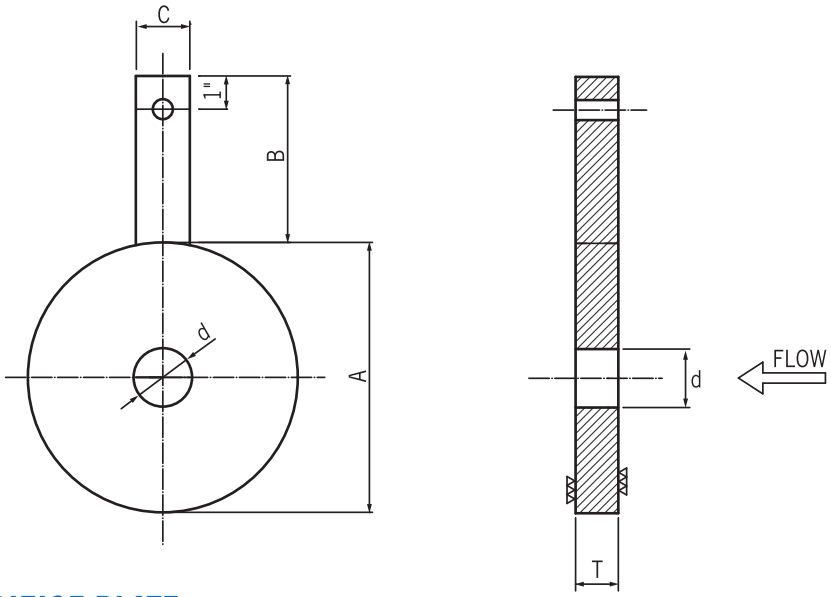

SEGMENTAL ORIFICE PLATE

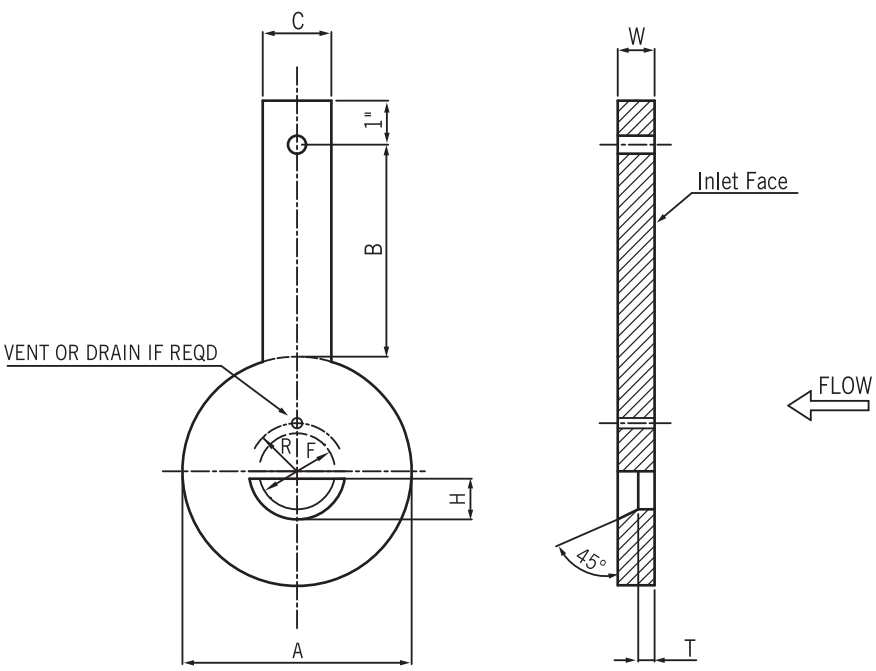

ECCENTRIC PLATE

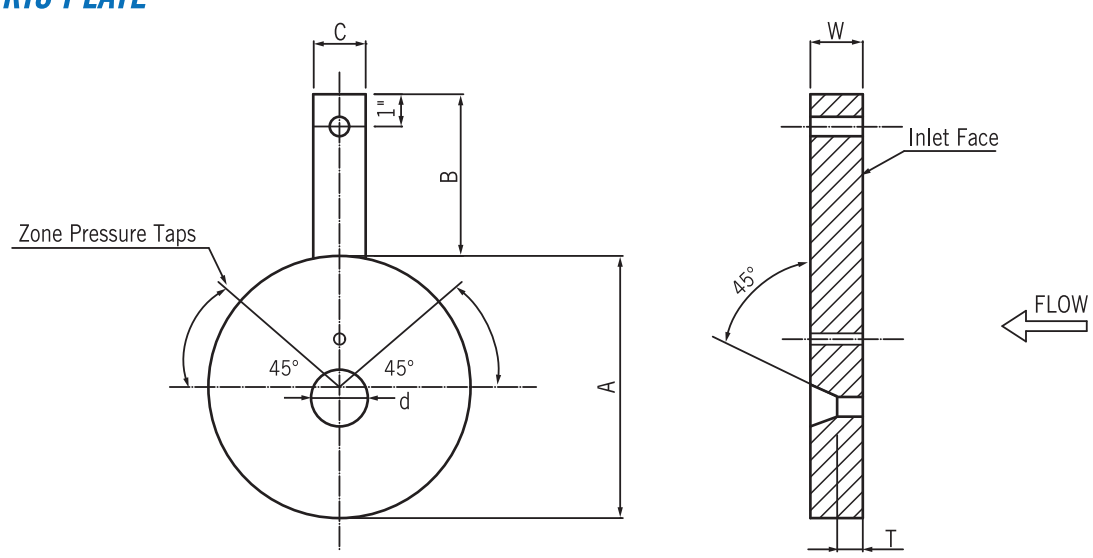

WWW.NEW-FLOW.DE | Tel: +49 3682 49099 | Fax: +49 3682 49093 | E-Mail: info@mess-regel.de

CORNER TYPE PLATE (MODEL: CORNER TAP-1)

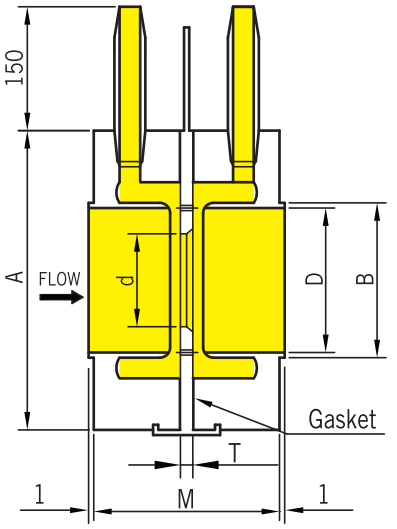

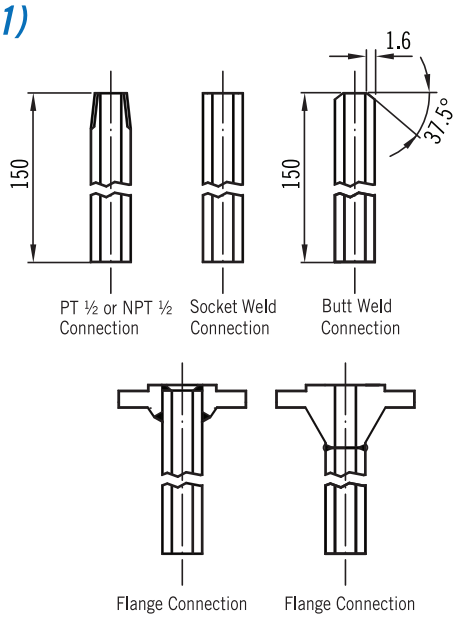

CORNER TYPE PLATE (MODEL: CORNER TAP-2)

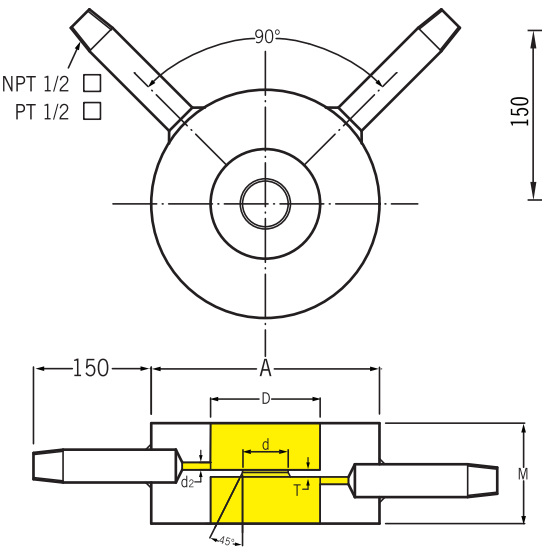

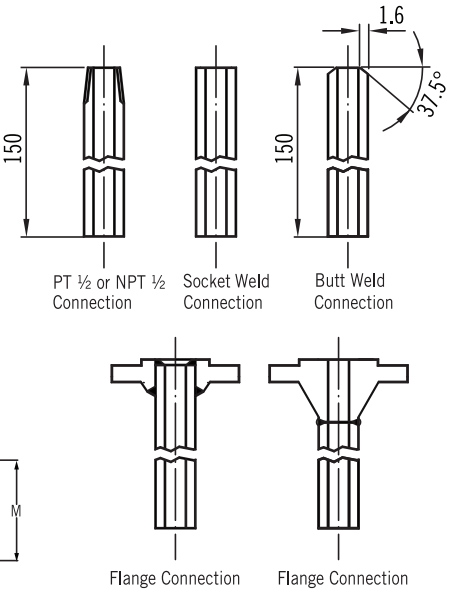

PADDLE TYPE LARGE AND SMALL ECCENTRIC PLATE

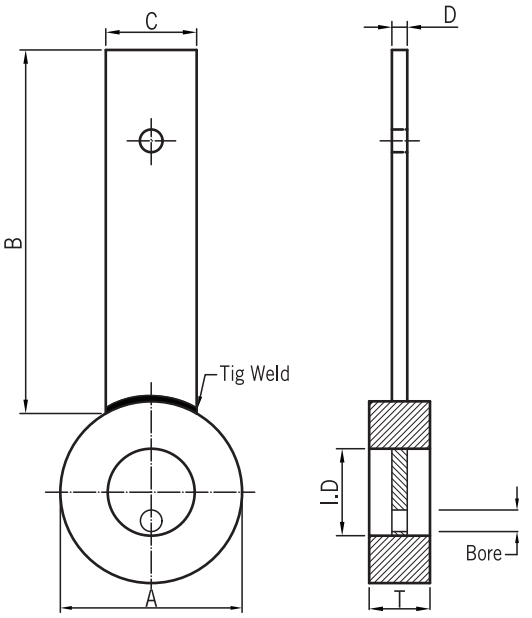

PADDLE TYPE LARGE AND SMALL CONCENTRIC PLATE

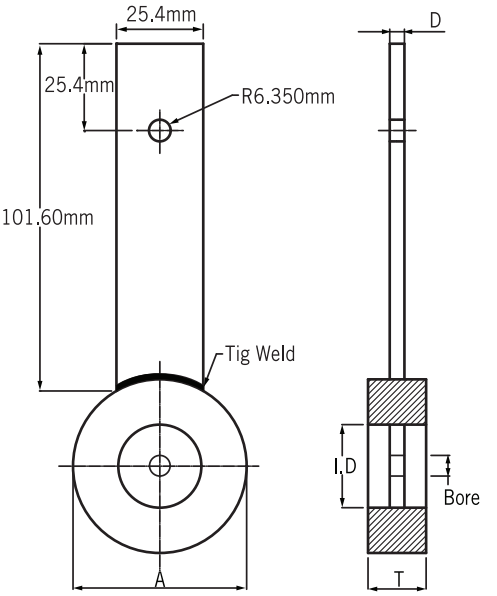

WWW.NEW-FLOW.DE | Tel: +49 3682 49099 | Fax: +49 3682 49093 | E-Mail: info@mess-regel.de

RING-JOINT ORIFICE PALTE

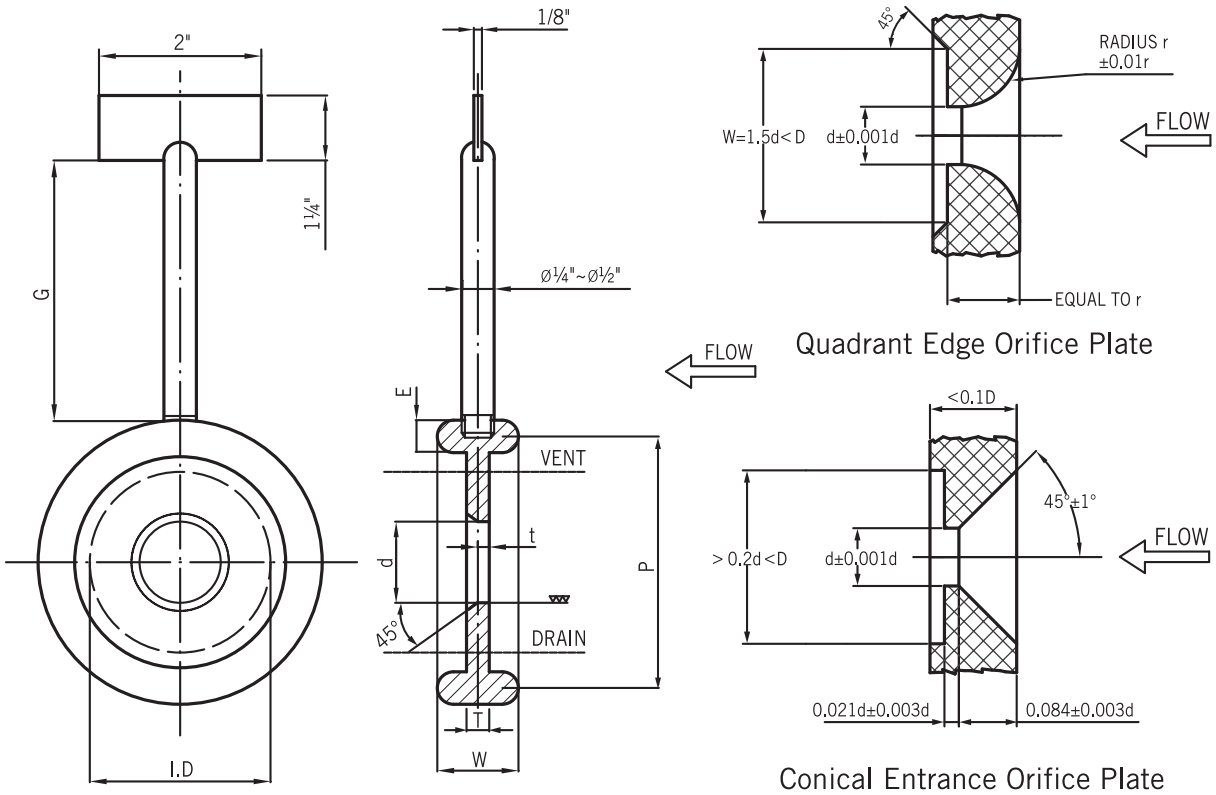

Square Edged

Quadrant Edge Orifice Plate

Conical Entrance Orifice Plate

SCREW TYPE RING-JOINT ORIFICE PLATE

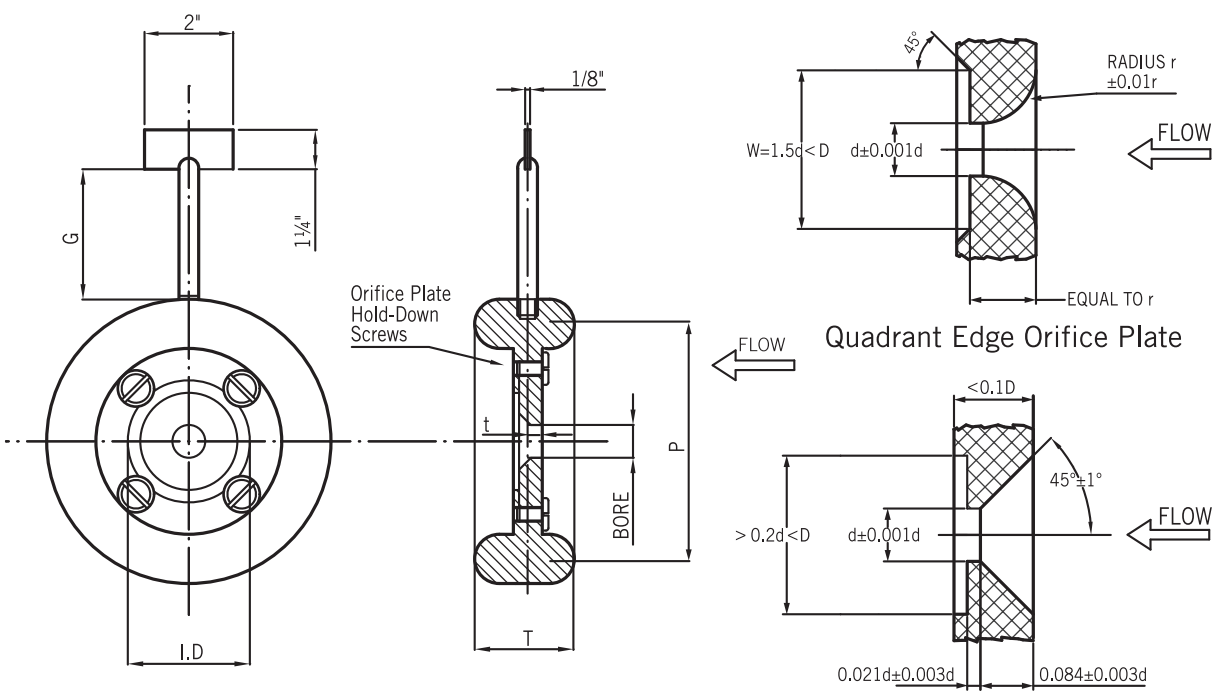

Square Edged

Quadrant Edge Orifice Plate

Conical Entrance Orifice Plate

WWW.NEW-FLOW.DE | Tel: +49 3682 49099 | Fax: +49 3682 49093 | E-Mail: info@mess-regel.de

300LB. -400LB. ANSI B16.36 FORGED STEEL WELDING NECK ORIFICE FLANGES

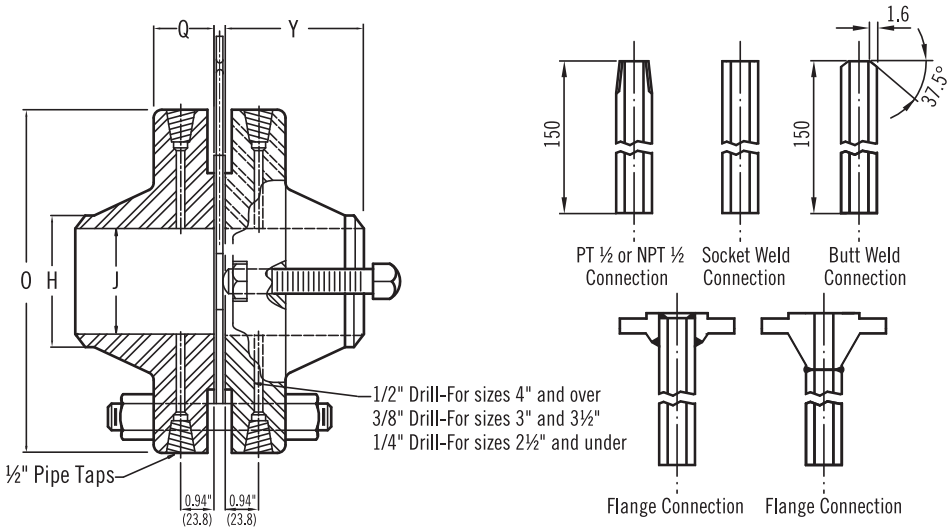

RAISED FACE (RF TYPE)

unit:mm

300 LB.														
NOMINAL PIPE SIZE	OUTSIDE DIAM OF FLANGE	THICKNESS OF FLANGES RAISED FACE	DIAM . OF HUB	LENGTH THROUGH HUB RAISED FACE	DIAM. OF BORE	DIAM. OF RAISED FACE	DEPTH OF JACK SCREW SLOT RAISED FACE	JACK SCREW SIZE	NUMBER OF BOLT HOLES	DIAM. OF HOLES	DIAM. OF BLOTS	LENGTH OF BOLTS RAISED FACE	BOLT CIRCLE	APPROX. WEIGHT UNION lb. RAISED FACE
	O	Q	H	Y	J			Two extra carbon steel bolts are furnished to be used as jack screws.						
1	123.8	38.1	33.5	82.6	26.7	71.4	9.5		4	19.1	15.9	101.6	88.9	8.2
1½	155.6	38.1	48.3	85.7	40.9	93.7	12.7		4	22.2	19.1	107.9	114.3	11.4
2	165.1	38.1	60.5	85.7	52.6	109.5	9.5		8	19.1	15.9	101.6	127.0	12.2
2½	190.5	38.1	73.2	88.9	62.7	128.6	12.7		8	22.2	19.1	107.9	149.2	15.8
3	209.6	38.1	88.9	88.9	78.0	147.6	12.7		8	22.2	19.1	107.9	168.3	19.5
4	254.0	38.1	114.3	92.7	102.4	179.4	12.7		8	22.2	19.1	107.9	200.0	29.9
6	317.5	38.1	168.4	100.0	154.2	247.7	12.7		12	22.2	19.1	107.9	269.8	48.1
8	381.0	41.1	219.2	111.1	203.0	304.8	15.9		12	25.4	22.2	107.9	330.2	69.0
10	444.5	47.8	273.1	117.5	254.5	358.8	19.1		16	28.6	25.4	139.7	387.4	98.0
12	520.7	50.8	323.9	130.2	304.8	419.1	22.2		16	31.8	28.6	139.7	450.9	148.5
14	584.2	53.8	355.6	142.9	366.6	482.6	22.2		20	31.8	28.6	152.4	514.4	203.3
16	647.7	57.2	406.1	146.1	387.4	536.6	25.4		20	34.9	31.8	165.1	571.5	270.5
18	711.2	60.5	457.2	158.8	438.2	593.7	25.4		24	34.9	31.8	165.1	628.6	336.4
20	774.7	63.5	508.0	161.9	489.0	650.9	25.4		24	34.9	31.8	177.8	685.8	402.6
24	914.4	69.9	609.6	168.3	593.1	771.5	31.8		24	42.3	38.1	190.5	812.8	595.2

400 LB.														
NOMINAL PIPE SIZE	OUTSIDE DIAM OF FLANGE	THICKNESS OF FLANGES RAISED FACE	DIAM . OF HUB	LENGTH THROUGH HUB RAISED FACE	DIAM. OF BORE	DIAM. OF RAISED FACE	DEPTH OF JACK SCREW SLOT RAISED FACE	JACK SCREW SIZE	NUMBER OF BOLT HOLES	DIAM. OF HOLES	DIAM. OF BLOTS	LENGTH OF BOLTS RAISED FACE	BOLT CIRCLE	APPROX. WEIGHT UNION lb. RAISED FACE
	O	Q	H	Y	J									
1	123.8	44.5	33.5	82.6	To be specified by purchaser.	71.4	9.5	47.6	4	19.1	15.9	120.7	88.9	8.2
1½	155.6	44.5	48.3	85.7		93.7	12.7	57.2	4	22.2	19.1	127.0	114.3	11.4
2	165.1	44.5	60.5	85.7		109.5	9.5	47.6	8	22.2	15.9	120.7	127.0	12.3
2½	191.5	44.5	73.2	88.9		128.6	12.7	57.2	8	22.2	19.1	127.0	149.2	15.9
3	209.6	44.5	88.9	88.9		147.6	12.7	57.2	8	22.2	19.1	127.0	168.3	19.5
4	254.0	44.5	114.3	88.9		157.2	6.4	57.2	8	25.4	22.2	139.7	200.0	37.2
6	317.5	47.5	168.4	103.2		215.9	12.7	88.9	12	25.4	22.2	158.8	269.9	61.7
8	381.0	54.1	219.2	117.5		269.5	12.7	88.9	12	28.6	25.4	171.5	330.2	96.7
10	444.5	60.2	273.1	123.8		323.9	12.7	101.6	16	31.8	28.6	193.7	387.4	140.3
12	520.7	63.5	323.9	136.5		381.0	12.7	101.6	16	34.9	31.8	203.2	450.9	194.8
14	584.2	67.1	355.6	149.2		412.8	12.7	108.3	20	34.9	31.8	209.6	514.4	251.5
16	647.7	69.9	406.0	152.4		469.9	12.7	108.3	20	38.1	34.9	222.3	571.5	320.0
18	711.2	72.9	457.2	165.1		533.4	12.7	44.3	24	38.1	34.9	234.9	628.7	391.8
20	774.7	76.2	508.0	168.3		584.2	12.7	120.7	24	41.3	38.1	247.7	685.8	483.9
24	914.4	82.6	609.6	174.6		692.2	12.7	127.0	24	47.6	44.5	279.4	812.8	706.0

WWW.NEW-FLOW.DE | Tel: +49 3682 49099 | Fax: +49 3682 49093 | E-Mail: info@mess-regel.de

600LB. -1500LB. ANSI B16.36 FORGED STEEL WELDING NECK ORIFICE FLANGES

RAISED FACE (RF TYPE)

600 LB.														
NOMINAL PIPE SIZE	OUTSIDE DIAM OF FLANGE	THICKNESS OF FLANGES RAISED FACE	DIAM . OF HUB	LENGTH THROUGH HUB RAISED FACE	DIAM. OF BORE	DIAM. OF RAISED FACE	DEPTH OF JACK SCREW SLOT RAISED FACE	JACK SCREW SIZE	NUMBER OF BOLT HOLES	DIAM. OF BOLT HOLES	DIAM. OF STUD BLOTS	LENGTH OF STUD BOLTS RAISED FACE	BOLT CIRCLE	APPROX. WEIGHT UNION lb. RAISED FACE
	O	Q	H	Y	J									
1	123.8	44.5	33.5	82.6	To be specified by purchaser.	71.4	9.5	47.6	4	17.5	15.9	120.7	88.9	8.2
1½	155.6	44.5	48.3	85.7		93.7	12.7	57.2	4	20.6	19.1	127.0	114.3	11.4
2	165.1	44.5	60.5	85.7		109.5	9.5	47.6	8	17.5	15.9	120.7	127.0	12.3
2½	190.5	44.5	73.2	88.9		128.6	12.7	57.2	8	20.6	19.1	127.0	149.2	15.9
3	209.6	44.5	88.9	88.9		147.6	12.7	57.2	8	20.6	19.1	127.0	168.3	19.5
4	273.1	44.5	114.3	101.6		157.2	6.4	57.2	8	25.4	22.2	146.1	215.9	46.8
6	355.6	54.1	168.4	117.5		215.9	12.7	88.9	12	28.6	25.4	171.5	292.1	88.5
8	419.1	62.0	219.2	133.3		269.9	12.7	101.6	12	108.0	28.6	193.7	349.3	126.2
10	508.0	69.9	273.1	152.4		323.9	12.7	101.6	16	34.9	31.8	215.9	431.8	206.1
12	558.8	72.9	233.9	155.6		381.0	12.7	114.3	20	34.9	31.8	228.6	489.0	251.1
14	603.3	76.2	355.6	165.1		412.8	12.7	127.0	20	38.1	34.9	235.0	527.1	370.0
16	685.8	82.6	406.4	177.8		469.9	12.7	127.0	20	41.3	38.1	254.0	603.3	505.3
18	743.0	88.9	457.2	184.2		533.4	12.7	127.0	20	44.5	41.3	279.4	654.1	592.9
20	813.8	95.3	508.0	190.5		584.2	12.7	152.4	24	44.5	41.3	298.5	723.9	612.9
24	939.8	108.0	609.6	203.2		692.2	12.7	152.4	24	50.8	47.6	336.6	838.2	1044.2

900 LB. (for sizes 2-1/2 inch and smaller, use 1500LB.)														
NOMINAL PIPE SIZE	OUTSIDE DIAM OF FLANGE	THICKNESS OF FLANGES	DIAM . OF HUB	LENGTH THROUGH HUB	DIAM. OF BORE	DIAM. OF RAISED FACE	DEPTH OF JACK SCREW SLOT RAISED FACE	JACK SCREW SIZE	NUMBER OF BOLT HOLES	DIAM. OF BOLT HOLES	DIAM. OF STUD BLOTS	LENGTH OF STUD BOLTS RAISED FACE	BOLT CIRCLE	APPROX. WEIGHT UNION lb. RAISED FACE
	O	Q	H	Y	J									
3	241.3	44.5	88.9	101.6	To be specified by purchaser.	127.0	9.5	88.9	8	25.4	22.2	146.1	190.5	35.9
4	292.1	50.8	114.3	114.3		157.2	9.5	88.9	8	31.8	26.5	177.8	235.0	58.6
6	381.0	62.0	168.4	139.7		215.9	15.9	114.3	12	31.8	28.6	193.7	317.5	119.4
8	469.9	69.9	219.2	161.9		269.9	15.9	114.3	12	38.1	34.9	228.6	393.7	202.0
10	546.1	76.2	273.1	184.2		323.9	15.9	114.3	16	38.1	34.9	235.0	469.9	287.8
12	609.1	85.6	323.9	200.0		381.0	15.9	114.3	20	38.1	34.9	254.0	533.4	395.9

1500 LB.														
NOMINAL PIPE SIZE	OUTSIDE DIAM OF FLANGE	THICKNESS OF FLANGES RAISED FACE	DIAM . OF HUB	LENGTH THROUGH HUB RAISED FACE	DIAM. OF BORE	DIAM. OF RAISED FACE	DEPTH OF JACK SCREW SLOT RAISED FACE	JACK SCREW SIZE	NUMBER OF BOLT HOLES	DIAM. OF BOLT HOLES	DIAM. OF STUD BLOTS	LENGTH OF STUD BOLTS RAISED FACE	BOLT CIRCLE	APPROX. WEIGHT UNION lb. RAISED FACE
	O	Q	H	Y	J									
1	149.2	44.5	33.5	73.1	To be specified by purchaser.	50.8	6.4	76.2	4	25.4	22.2	139.7	101.6	11.8
1½	177.8	44.5	48.3	82.6		73.1	6.4	76.2	4	28.6	25.4	146.1	123.8	20.4
2	215.9	44.5	60.5	101.6		92.1	6.4	76.2	8	25.4	22.2	146.1	165.1	29.5
2½	244.5	47.5	73.2	104.8		104.8	6.4	76.2	8	28.6	25.4	158.8	190.5	44.5
3	266.7	54.1	88.9	117.5		127.0	9.6	114.3	8	31.8	28.6	177.8	203.2	55.8
4	311.2	60.2	114.3	123.8		157.2	9.6	114.3	8	34.9	31.8	196.9	241.3	82.6
6	393.7	88.9	168.4	171.5		215.9	15.9	165.1	12	38.1	34.9	260.4	317.5	184.8
8	482.6	98.3	219.2	212.7		269.9	15.9	165.1	12	44.5	41.3	292.1	393.7	306.5
10	584.2	114.3	273.1	254.0		323.9	15.9	165.1	12	50.8	47.6	336.6	482.6	498.9
12	673.1	130.3	323.9	282.6		381.0	15.9	165.1	16	54.0	50.8	374.7	571.5	774.5
14	749.3	139.7	355.6	298.5		412.8	15.9	170.0	16	60.5	57.2	412.8	635.0	973.0
16	825.5	152.5	406.4	311.2		469.9	15.9	185.0	16	66.7	63.5	450.9	704.9	1260
18	914.4	168.4	457.2	327.2		533.4	15.9	198.5	16	73.0	71.1	489.0	774.7	1695
20	984.3	184.2	508.0	355.6		584.2	15.9	215.0	16	79.4	76.2	546.1	831.9	2064
24	1168.4	209.4	609.6	406.4		692.2	15.9	240.0	16	92.1	88.9	622.3	990.6	3305

WWW.NEW-FLOW.DE | Tel: +49 3682 49099 | Fax: +49 3682 49093 | E-Mail: info@mess-regel.de

300LB. -400LB. ANSI B16.36 FORGED STEEL WELDING NECK ORIFICE FLANGES

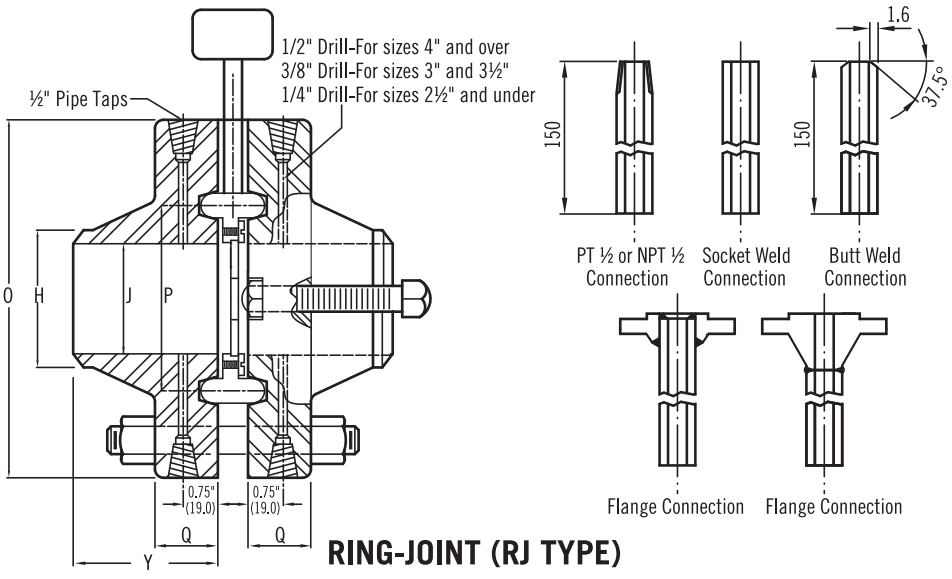

RING-JOINT (RJ TYPE)

unit:mm

300 LB.

NOMINAL PIPE SIZE	OUTSIDE DIAM OF FLANGE	THICKNESS OF FLANGES RING JOINT	DIAM. OF HUB	LENGTH THROUGH HUB RING JOINT	DIAM. OF BORE	DIAM. OF PITCH	DEPTH OF JACK SCREW SLOT RING JOINT	JACK SCREW SIZE	NUMBER OF BOLT HOLES	DIAM. OF HOLES	DIAM. OF BLOTS	LENGTH OF BOLTS RING JOINT	BOLT CIRCLE	APPROX. WEIGHT UNION lb. RING JOINT
	O	Q	H	Y	J	P		Two extra carbon steel bolts are furnished to be used as jack screws.						
1	123.8	38.1	33.5	76.2	26.7	50.8	6.4		4	27.0	15.9	120.7	88.9	6.8
1½	155.6	38.1	48.3	79.4	40.9	68.3	6.4		4	30.2	19.1	127.0	114.3	11.4
2	165.1	38.1	60.5	79.4	52.6	82.6	6.4		8	27.0	15.9	120.7	127.0	13.6
2½	190.5	38.1	73.2	82.6	62.7	101.6	6.4		8	30.2	19.1	127.0	149.2	20.8
3	209.6	38.1	88.9	82.6	78.0	123.8	6.4		8	30.2	19.1	127.0	168.3	25.4
4	254.0	38.1	114.3	85.7	102.4	149.2	6.4		8	30.2	19.1	127.0	200.0	29.5
6	317.5	38.1	168.4	98.4	154.2	134.9	6.4		12	22.2	19.1	139.7	269.8	48.6
8	381.0	41.1	219.2	111.1	203.0	269.9	9.5		12	25.4	22.2	152.4	330.2	76.7
10	444.5	47.8	273.1	117.5	254.5	323.9	12.7		16	28.6	25.4	165.1	387.4	113.5
12	520.7	50.8	323.9	130.2	304.8	381.0	15.9		16	31.8	28.6	177.8	450.9	165.7
14	584.2	53.8	355.6	142.9	366.6	419.1	15.9		20	31.8	28.6	177.8	514.4	222.4
16	647.7	57.2	406.1	146.1	387.4	469.9	19.1		20	34.9	31.8	203.2	571.5	290.6
18	711.2	60.5	457.2	158.8	438.2	533.0	19.1		24	34.9	31.8	203.2	628.6	356.4
20	774.7	63.5	508.0	161.9	489.0	584.2	19.1		24	34.9	31.8	203.2	685.8	435.8
24	914.4	69.9	609.6	168.3	593.1	692.2	25.4		24	42.3	38.1	228.6	812.8	640.1

400 LB.

NOMINAL PIPE SIZE	OUTSIDE DIAM OF FLANGE	THICKNESS OF FLANGES RING JOINT	DIAM. OF HUB	LENGTH THROUGH HUB RING JOINT	DIAM. OF BORE	DIAM. OF PITCH	DEPTH OF JACK SCREW SLOT RING JOINT	JACK SCREW SIZE	NUM-BER OF BOLT	DIAM. OF HOLES	DIAM. OF BLOTS	LENGTH OF BOLTS RING JOINT	BOLT CIRCLE	APPROX. WEIGHT UNION lb. RING JOINT
	O	Q	H	Y	J	P								
1	123.8	44.5	33.5	82.6	To be specified by purchaser.	50.8	6.4	63.5	4	27.0	15.9	133.4	88.9	6.8
1½	155.6	44.5	48.3	85.7		68.3	6.4	76.2	4	30.2	19.1	139.7	114.3	11.4
2	165.1	46.0	60.5	85.7		82.6	6.4	63.5	8	30.2	15.9	133.4	127.0	13.6
2½	191.5	46.0	73.2	88.9		101.6	6.4	76.2	8	30.2	19.1	139.7	149.2	20.9
3	209.6	46.0	88.9	88.9		123.8	6.4	76.2	8	30.2	19.1	139.7	168.3	25.4
4	254.0	46.0	114.3	88.9		149.2	15.9	76.2	8	30.2	22.2	152.4	200.0	40.9
6	317.5	49.1	168.4	103.2		134.9	22.2	101.6	12	25.4	22.2	165.1	269.9	65.8
8	381.0	55.7	219.2	117.5		269.9	22.2	114.3	12	28.6	25.4	184.2	330.2	99.9
10	444.5	61.8	273.1	123.8		323.9	22.2	114.3	16	31.8	28.6	203.2	387.4	147.6
12	520.7	65.1	323.9	136.5		381.0	22.2	127.0	16	34.9	31.8	215.9	450.9	204.3
14	584.2	68.6	355.6	149.2		419.1	22.2	127.0	20	34.9	31.8	228.6	514.4	267.9
16	647.7	71.4	406.0	152.4		469.9	22.2	127.0	20	38.1	34.9	234.9	571.5	338.2
18	711.2	74.5	457.2	165.1		533.0	22.2	127.0	24	38.1	34.9	241.3	628.7	413.1
20	774.7	79.4	508.0	168.3		584.2	22.2	139.7	24	41.3	38.1	260.4	685.8	526.6
24	914.4	87.3	609.6	174.6		690.2	22.2	152.0	24	47.6	44.5	285.8	812.8	755.9

WWW.NEW-FLOW.DE | Tel: +49 3682 49099 | Fax: +49 3682 49093 | E-Mail: info@mess-regel.de

600LB. -1500LB. ANSI B16.36 FORGED STEEL WELDING NECK ORIFICE FLANGES

RING-JOINT (RJ TYPE)

unit:mm

600 LB.														
NOMINAL PIPE SIZE	OUTSIDE DIAM OF FLANGE	THICKNESS OF FLANGES RING JOINT	DIAM . OF HUB	LENGTH THROUGH HUB RING JOINT	DIAM. OF BORE	DIAM. OF PITCH	DEPTH OF JACK SCREW SLOT RING JOINT	JACK SCREW SIZE	NUM-BER OF BOLT HOLES	DIAM. OF BOLT HOLES	DIAM. OF STUD BLOTS	LENGTH OF STUD BOLTS RING JOINT	BOLT CIRCLE	APPROX. WEIGHT UNION lb. RING JOINT
	O	Q	H	Y	J	P								
1	123.8	44.5	33.5	76.2	To be specified by purchaser.	50.8	12.7	55.6	4	19.1	15.9	133.4	88.9	6.8
1½	155.6	44.5	48.3	79.4		68.3	12.7	55.6	4	22.2	19.1	139.7	114.3	11.4
2	165.1	46.0	60.5	79.4		82.6	12.7	63.5	8	19.1	15.9	133.4	127.0	13.6
2½	190.5	46.0	73.2	82.6		101.6	12.7	63.5	8	22.2	19.1	139.7	149.2	20.9
3	209.6	46.0	88.9	82.6		123.8	15.9	76.2	8	22.2	19.1	139.7	168.3	25.4
4	273.1	46.0	114.3	101.6		149.2	15.9	76.2	8	25.4	22.2	158.8	215.9	44.9
6	355.6	55.7	168.4	117.5		211.1	22.2	114.3	12	28.6	25.4	184.2	292.1	89.4
8	419.1	63.6	219.2	133.3		269.9	22.2	120.7	12	108.0	28.6	209.6	349.3	128.9
10	508.0	71.4	273.1	152.4		323.9	22.2	127.0	16	34.9	31.8	228.6	431.8	214.3
12	558.8	74.5	233.9	155.6		381.0	22.2	127.0	20	34.9	31.8	235.0	489.0	259.2
14	603.3	77.8	355.6	165.1		419.1	22.2	139.7	20	38.1	34.9	247.7	527.1	377.0
16	685.8	84.1	406.4	177.8		469.9	22.2	139.7	20	41.3	38.1	266.7	603.3	515.3
18	743.0	90.5	457.2	184.2		533.4	22.2	146.1	20	44.5	41.3	285.8	654.1	603.8
20	813.8	98.4	508.0	190.5		584.2	22.2	158.8	24	44.5	41.3	304.8	723.9	631.1
24	939.8	112.7	609.6	203.2		692.2	22.2	177.8	24	50.8	47.6	342.9	838.2	1078.3

900 LB. (for sizes 2-1/2 inch and smaller, use 1500LB.)														
NOMINAL PIPE SIZE	OUTSIDE DIAM OF FLANGE	THICKNESS OF FLANGES	DIAM . OF HUB	LENGTH THROUGH HUB	DIAM. OF BORE	DIAM. OF PITCH	DEPTH OF JACK SCREW SLOT RING JOINT	JACK SCREW SIZE	NUMBER OF BOLT HOLES	DIAM. OF BOLT HOLES	DIAM. OF STUD BLOTS	LENGTH OF STUD BOLTS RING JOINT	BOLT CIRCLE	APPROX. WEIGHT UNION lb. RING JOINT
	O	Q	H	Y	J	P								
3	241.3	46.0	88.9	101.6	To be specified by purchaser.	123.8	15.9	120.7	8	25.4	22.2	158.8	190.5	38.6
4	292.1	52.4	114.3	114.3		149.2	15.9	85.7	8	31.8	26.5	184.2	235.0	63.6
6	381.0	63.6	168.4	139.7		211.1	22.2	120.7	12	31.8	28.6	209.6	317.5	127.1
8	469.9	71.4	219.2	161.9		269.9	22.2	127.0	12	38.1	34.9	235.0	393.7	215.7
10	546.1	77.8	273.1	184.2		323.9	22.2	133.3	16	38.1	34.9	247.7	469.9	306.5
12	609.1	87.2	323.9	200.0		381.0	22.2	139.7	20	38.1	34.9	273.1	533.4	422.2

1500 LB.														
NOMINAL PIPE SIZE	OUTSIDE DIAM OF FLANGE	THICKNESS OF FLANGES RING JOINT	DIAM . OF HUB	LENGTH THROUGH HUB RING JOINT	DIAM. OF BORE	DIAM. OF PITCH	DEPTH OF JACK SCREW SLOT RING JOINT	JACK SCREW SIZE	NUMBER OF BOLT HOLES	DIAM. OF BOLT HOLES	DIAM. OF STUD BLOTS	LENGTH OF STUD BOLTS RING JOINT	BOLT CIRCLE	APPROX. WEIGHT UNION lb. RING JOINT
	O	Q	H	Y	J	P								
1	149.2	44.5	33.5	76.2	To be specified by purchaser.	50.8	12.7	55.6	4	25.4	22.2	146.1	101.6	12.3
1½	177.8	44.5	48.3	82.6		68.3	12.7	55.6	4	28.6	25.4	152.4	123.8	18.6
2	215.9	46.0	60.5	101.6		95.3	12.7	63.5	8	25.4	22.2	158.8	165.1	32.2
2½	244.5	49.1	73.2	104.8		108.0	12.7	63.5	8	28.6	25.4	171.5	190.5	45.4
3	266.7	55.7	88.9	117.5		127.0	15.9	85.7	8	31.8	28.6	193.7	203.2	59.5
4	311.2	61.8	114.3	123.8		157.2	15.9	85.7	8	34.9	31.8	209.6	241.3	90.8
6	393.7	92.1	168.4	171.5		215.9	22.2	152.4	12	38.1	34.9	279.4	317.5	197.5
8	482.6	103.1	219.2	212.7		269.9	22.2	165.1	12	44.5	41.3	317.5	393.7	324.6
10	584.2	119.1	273.1	254.0		323.9	22.2	177.8	12	50.8	47.6	362.0	482.6	528.9
12	673.1	138.2	323.9	282.6		381.0	22.2	203.2	16	54.0	50.8	406.4	571.5	812.7

WWW.NEW-FLOW.DE | Tel: +49 3682 49099 | Fax: +49 3682 49093 | E-Mail: info@mess-regel.de

300LB. -1500LB. ANSI B16.36 FORGED STEEL SLIP-ON ORIFICE FLANGES

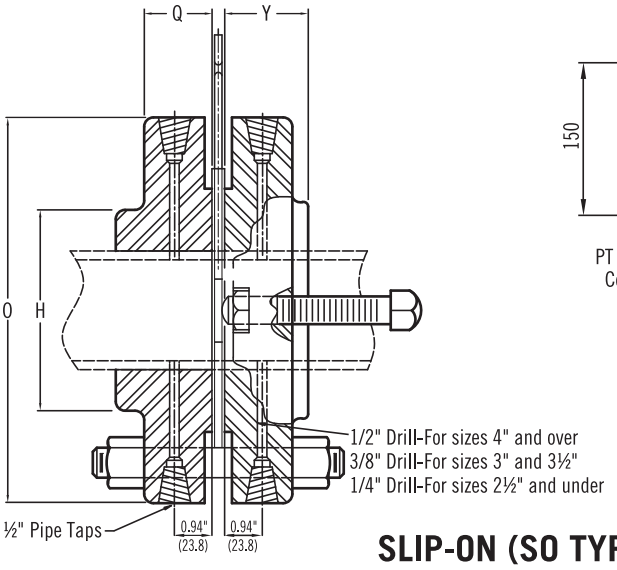

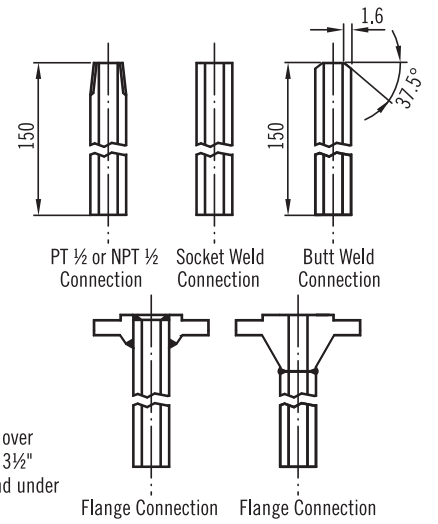

SLIP-ON (SO TYPE)

unit:mm

300 LB.															
NOMINAL PIPE SIZE	OUTSIDE DIAM OF FLANGE	THICKNESS OF FLANGES	DIAM . OF HUB	LENGTH THROUGH HUB	DIAM. OF RAISED FACE SLIP-ON	DIAM. OF BORE	HEIGHT TO COUNTER BORE	FACE COUNTER BORE HEIGHT	DEPTH OF JACK SCREW SLOT	NUM-BER OF BOLT HOLES	DIAM. OF BOLT HOLES	DIAM. OF BLOTS	LENGTH OF BOLTS	BOLT CIRCLE	APPROX. WEIGHT UNIT lb.
	O	Q	H	Y			F	G							
1	123.8	38.1	54.0	47.6	71.4	34.5	38.1	20.6	9.5	4	17.5	15.9	101.6	88.9	6.8
1½	155.6	38.1	44.5	47.6	93.7	49.5	38.1	15.9	12.7	4	20.6	19.1	108.0	114.3	8.6
2	165.1	38.1	84.1	49.2	109.5	62.0	38.1	12.7	9.5	8	17.5	15.9	101.6	127.0	10.4
2½	190.5	38.1	100.0	50.8	128.6	76.7	44.5	15.9	12.7	8	20.6	19.1	108.0	149.2	14.1
3	210.0	38.1	117.5	52.4	147.6	90.7	44.5	12.7	12.7	8	20.6	19.1	108.0	168.3	17.7
4	254.0	38.1	146.1	54.0	179.4	116.1	44.5	11.1	12.7	8	20.6	19.1	108.0	200.0	27.2
6	317.5	38.1	206.4	54.0	247.7	170.7	44.5	6.4	12.7	12	22.2	19.1	108.0	270.0	45.4
8	381.0	41.1	260.4	61.9	304.8	221.5	50.8	-	15.9	12	25.4	22.2	114.3	330.2	60.8
10	444.5	47.8	320.7	66.7	358.8	276.4	55.6	-	19.1	16	28.6	25.4	139.7	387.4	89.0
12	520.7	50.8	374.7	73.0	419.1	327.2	60.3	-	22.2	16	31.8	28.6	139.7	450.9	128.0
14	584.2	53.8	425.5	76.2	482.6	359.2	63.5	-	22.2	20	31.8	28.6	152.4	514.4	172.5
16	647.7	57.2	482.6	82.6	536.6	410.5	68.3	-	25.4	20	34.9	31.8	165.1	571.5	281.5
18	711.2	60.5	533.4	88.9	593.7	461.8	69.9	-	25.4	24	34.9	31.8	165.1	628.6	313.7
20	774.7	63.5	587.4	95.3	650.9	513.1	73.0	-	25.4	24	34.9	31.8	177.8	685.8	354.6
24	914.4	69.9	701.7	106.4	692.2	616.0	82.6	-	31.8	24	41.3	38.1	190.5	812.8	545.3

400 LB. (sizes 3 inch and smaller furnished same as 300LB. except with stud bolts long enough for extra nut.)														
NOMINAL PIPE SIZE	OUTSIDE DIAM OF FLANGE	THICKNESS OF FLANGES	DIAM . OF HUB	LENGTH THROUGH HUB	HEIGHT TO COUNTER BORE	DIAM. OF TO RAISED FACE	DEPTH OF JACK SCREW SLOT	JACK SCREW SIZE	NUMBER OF BOLT HOLES	DIAM. OF BOLT HOLES	DIAM. OF BLOTS	LENGTH OF BOLTS STUD	BOLT CIRCLE	APPROX. WEIGHT UNIT lb.
	O	Q	H	Y	F									
4	254.0	44.5	146.1	50.8	42.9	157.2	6.4	19.1x76.2	203.2	25.4	22.2	139.7	200.0	29.0
6	317.5	47.5	206.4	57.2	52.4	215.9	9.5	25.4x88.9	304.8	25.4	22.2	158.8	269.9	50.0
8	381.0	54.1	260.4	68.3	57.2	269.9	9.5	25.4x88.9	304.8	28.6	25.4	171.5	330.2	76.7
10	444.5	60.2	320.7	73.0	61.9	323.9	12.7	25.4x101.6	406.4	31.8	28.6	193.7	387.4	108.5
12	520.7	63.5	374.7	79.4	66.7	381.0	15.9	25.4x101.6	406.4	34.9	31.8	203.2	450.9	151.2

600 LB. (sizes 3 inch and smaller furnished same as 300LB. except with stud bolts long enough for extra nut.)														
NOMINAL PIPE SIZE	OUTSIDE DIAM OF FLANGE	THICKNESS OF FLANGES	DIAM . OF HUB	LENGTH THROUGH HUB	HEIGHT TO COUNTER BORE	DIAM. OF TO RAISED FACE	DEPTH OF JACK SCREW SLOT	JACK SCREW SIZE	NUMBER OF BOLT HOLES	DIAM. OF BOLT HOLES	DIAM. OF BLOTS STUD	LENGTH OF BOLTS STUD	BOLT CIRCLE	APPROX. WEIGHT UNIT lb.
	O	Q	H	Y	F									
4	273.1	44.5	152.4	54.0	47.6	157.2	6.4	19.1x76.2	8	25.4	22.2	146.1	215.9	40.4
6	355.6	54.1	222.3	66.7	57.2	215.9	12.7	25.4x88.9	12	28.6	25.4	171.5	292.1	87.6
8	419.1	62.0	273.1	76.2	63.5	269.9	12.7	25.4x101.6	12	31.8	28.6	193.7	349.3	124.4
10	508.0	69.9	342.9	85.7	71.4	323.9	12.7	25.4x101.6	16	34.9	31.8	215.9	431.8	195.0
12	558.8	72.9	400.1	92.1	76.2	381.0	12.7	25.4x114.3	20	34.9	31.8	228.6	489.0	241.1

WWW.NEW-FLOW.DE | Tel: +49 3682 49099 | Fax: +49 3682 49093 | E-Mail: info@mess-regel.de

900 LB.														
NOMINAL PIPE SIZE	OUTSIDE DIAM OF FLANGE	THICKNESS OF FLANGES	DIAM . OF HUB	LENGTH THROUGH HUB	HEIGHT TO COUNTER BORE	DIAM. OF TO RAISED FACE	DEPTH OF JACK SCREW SLOT	JACK SCREW SIZE	NUMBER OF BOLT HOLES	DIAM. OF BOLT HOLES	DIAM. OF BLOTS STUD	LENGTH OF BOLTS STUD	BOLT CIRCLE	APPROX. WEIGHT UNIT lb.
	O	Q	H	Y	F									
3	241.3	44.5	127.0	54.0	47.6	127.0	6.4	19.1x88.9	8	25.4	22.2	146.1	190.0	35.0
4	292.1	50.8	158.8	69.9	54.0	157.2	6.4	19.1x88.9	8	31.8	28.6	177.8	235.0	60.4
6	381.0	62.0	235.0	85.7	63.5	215.9	12.7	25.4x114.3	12	31.8	28.6	193.7	317.5	117.6
8	469.9	69.9	298.5	101.6	69.9	269.9	12.7	25.4x114.3	12	38.1	34.9	228.6	393.7	188.4
10	546.1	76.2	368.3	108.0	77.8	323.9	12.7	25.4x114.3	16	38.1	34.9	235.0	470.0	267.0
12	609.6	85.6	419.1	117.5	82.6	381.0	12.7	25.4x114.3	20	38.1	34.9	254.0	533.4	354.0

1500 LB.														
NOMINAL PIPE SIZE	OUTSIDE DIAM OF FLANGE	THICKNESS OF FLANGES	DIAM . OF HUB	LENGTH THROUGH HUB	HEIGHT TO COUNTER BORE	DIAM. OF TO RAISED FACE	DEPTH OF JACK SCREW SLOT	JACK SCREW SIZE	NUMBER OF BOLT HOLES	DIAM. OF BOLT HOLES	DIAM. OF BLOTS STUD	LENGTH OF BOLTS STUD	BOLT CIRCLE	APPROX. WEIGHT UNIT lb.
	O	Q	H	Y	F									
1	149.2	44.5	52.4	47.6	38.1	50.8	6.4	15.9x76.2	4	25.4	22.2	139.7	101.6	11.8
1½	177.8	44.5	69.9	47.6	38.1	73.0	6.4	15.9x76.2	4	28.6	25.4	146.1	123.8	20.4
2	215.9	44.5	104.8	57.2	44.5	92.1	6.4	15.9x76.2	8	25.4	22.2	146.1	165.1	29.5
2½	244.5	47.5	123.8	63.5	54.0	104.8	6.4	15.9x76.2	8	28.6	25.4	158.6	190.5	44.5
3	266.7	54.1	133.4	73.0	57.2	127.0	6.4	19.1x114.3	8	31.8	28.6	177.8	203.2	55.8
4	311.2	60.2	161.9	90.5	63.5	157.2	6.4	19.1x114.3	8	34.9	31.8	196.9	241.3	82.6
6	393.7	88.9	228.6	119.1	76.2	215.9	12.7	25.4x165.1	12	38.1	34.9	260.4	317.5	184.8
8	482.6	98.3	292.1	142.9	82.6	269.9	12.7	25.4x165.1	12	44.5	34.9	292.1	393.7	292.8
10	584.2	114.3	368.3	158.8	90.5	323.9	12.7	25.4x165.1	12	50.8	47.6	336.6	482.6	482.6
12	673.1	130.3	450.9	181.0	98.4	381.0	12.7	25.4x165.1	16	54.0	50.8	374.7	571.5	753.6

300LB. ANSI B16.36 FORGED STEEL THREAD ORIFICE FLANGES

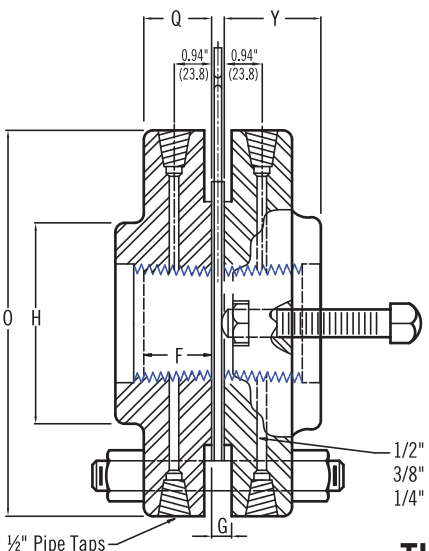

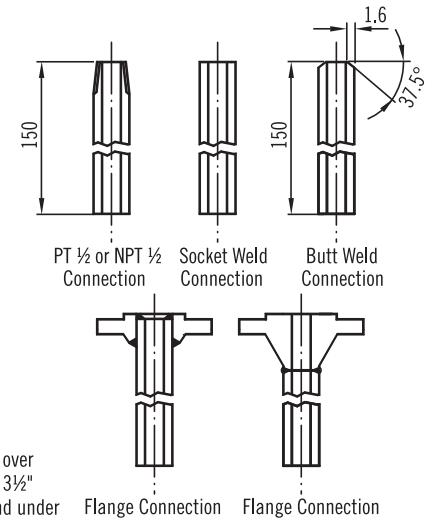

THREADED TYPE

unit:mm

300 LB.															
NOMINAL PIPE SIZE	OUTSIDE DIAM OF FLANGE	THICK-NESS OF FLANGES	DIAM . OF HUB	LENGTH THROUGH HUB	DIAM. OF TO RAISED FACE THREADED	DIAM. OF BORE	HEIGHT TO COUNTER BORE	FACE COUNTER BORE HEIGHT	DEPTH OF JACK SCREW SLOT	NUM-BER OF BOLT HOLES	DIAM. OF BOLT HOLES	DIAM. OF BLOTS	LENGTH OF BOLTS	BOLT CIRCLE	APPROX. WEIGHT UNIT lb.
	O	Q	H	Y			F	G							
1	123.8	38.1	54.0	47.6	71.4	34.5	38.1	20.6	9.5	4	17.5	15.9	101.6	88.9	6.8
1½	155.6	38.1	44.5	47.6	93.7	49.5	38.1	15.9	12.7	4	20.6	19.1	108.0	114.3	8.6
2	165.1	38.1	84.1	49.2	109.5	62.0	38.1	12.7	9.5	8	17.5	15.9	101.6	127.0	10.4
2½	190.5	38.1	100.0	50.8	128.6	76.7	44.5	15.9	12.7	8	20.6	19.1	108.0	149.2	14.1
3	210.0	38.1	117.5	52.4	147.6	90.7	44.5	12.7	12.7	8	20.6	19.1	108.0	168.3	17.7
4	254.0	38.1	146.1	54.0	179.4	116.1	44.5	11.1	12.7	8	20.6	19.1	108.0	200.0	27.2

WWW.NEW-FLOW.DE | Tel: +49 3682 49099 | Fax: +49 3682 49093 | E-Mail: info@mess-regel.de

Ordering Information

Individual Specification				Requirement		Requirement	
1	Tag No.	With S.S. Tag Nameplate					
2	Maker						
3	Model No.						
4	Quantity						
5	P&ID No.						
6	Line No. / Vessel No.						
7	Line Size	Sched No.					
8	Accuracy						
9	FCFC s Painting or Makers Painting STD						
Orifice Plates							
10	Plate Type						
11	Applied Code or Standard						
12	Plate Material						
13	Plate Thickness		(mm)				
14	Bore / Diameter Ratio		(d/D)				
15	Drain Hole	Vent Hole					
Flange & Ring							
16	Pipe Material						
17	Type (Flange or Ring)						
18	Flange / Ring Type						
19	Flange Conn. & Rating						
20	Flange / Ring Material						
21	Gasket Material						
22	Tap Type						
23	Tap Conn.						
24	Tap Material						
Accessories							
25	Bolts & Nuts	Jack Screws					
26	Drain Plugs	Material					
27	Tap Valve (½" x 2pc)	Material					
28	Others Material (Bolts & Nuts, ...)						
Operating Condition							
29	Fluid & State						
30	Flow Rate: Norm.	Max.	(T/Hr)				
31	Press. Norm.	Max.	(kg/cm^2G)				
32	Temp. Norm.	Max.	(°C)				
33	Specific Gravity Density						
34	Molecular Weight						
35	Viscosity Range		(cp)				
36	Compression Factor						
37	Ratio of Spec. Heat		(Cp/Cv)				
38	Measuring Range						
39	Diff. Pressure Range						

* Please fill in above block on request.

WWW.NEW-FLOW.DE | Tel: +49 3682 49099 | Fax: +49 3682 49093 | E-Mail: info@mess-regel.de