ACRYLIC PLASTIC FLOW METER
OEM AVAILABLE OA SERIES

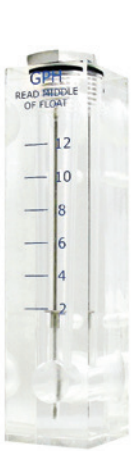

OA-1

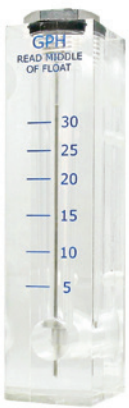

OA-2

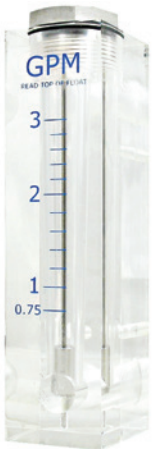

OA-3



OA-4

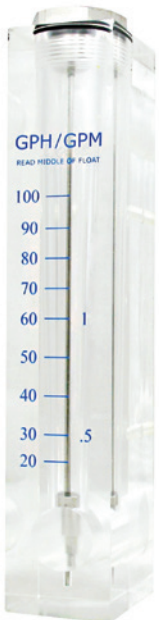

OA-5

Technical Data

Service: water or liquid
Wetted parts material: Body-Acrylic,O-ring- EPDM
Float Guide: Top plug 304 stainless steel
Temperature & pressure limits:
120 psig (8.4 bar) @100°F (38°C)
Temperature limited: 0-45°C
Accuracy: ±3% full scale
Mounting: vertical position

Approvals:

Dimensions

OA-1 & OA-2 Type

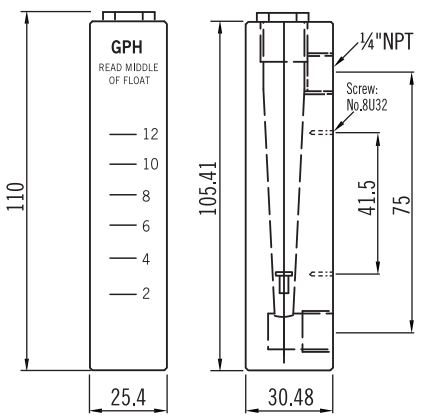

OA-3 Type

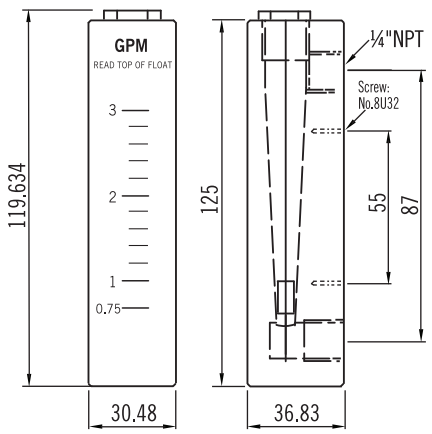

OA-4 Type

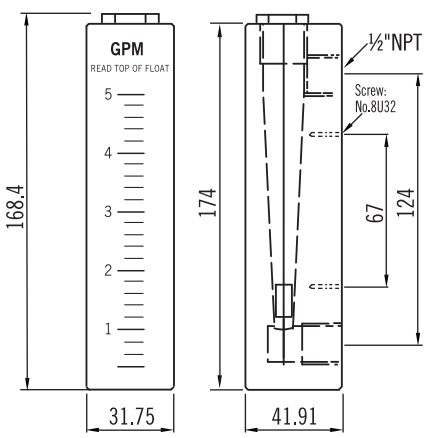

OA-5 Type

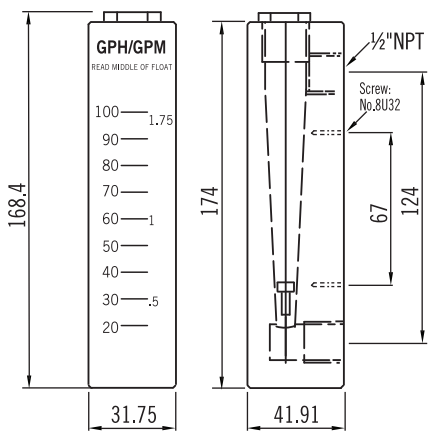

Range Table

Model	Range	Connection Size
OA-1	0~12 GPH Water	1/4"NPT Female
OA-2	0~30 GPH Water	1/4"NPT Female
OA-3	0~3 GPM Water	1/4"NPT Female
OA-4	0~5 GPM Water	1/2"NPT Female
OA-5	0~100 GPH Water	1/2"NPT Female

Flow Unit:
GPH, Gallon (us) per Hour
GPM, Gallon (us) per Minute

NOTE:
1. A expert flow meter manufacturer.
2. Any size flow range are available.
Please fax this sheet along with your inquiry to 886-7-8225588.

Special instruction, if any:

_____

_____

_____

WWW.NEW-FLOW.DE | Tel: +49 3682 49099 | Fax: +49 3682 49093 | E-Mail: info@mess-regel.de