LONG RADIUS NOZZLES



Technical Data

ISO 5167-3,2003(E) standard
Two long radius type
high-ratio nozzles ($0.25 \leq \beta \leq 0.8$)
low-ratio nozzles ($0.20 \leq \beta \leq 0.5$)
Flange wafer type.
Welded-in type.
Welded-in with holding ring type.
Material: A105, stainless steel. Others on request.

Long Radius Series

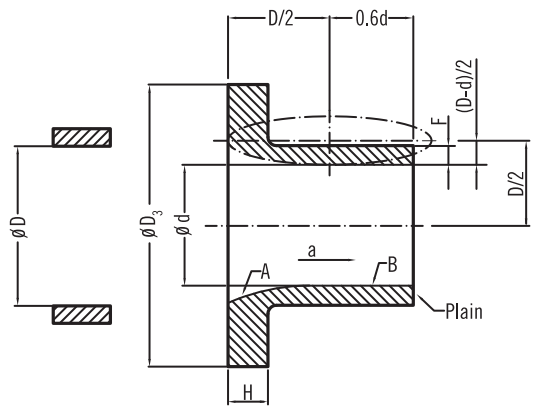

High ratio $0.25 \leqq \beta \leqq 0.8$

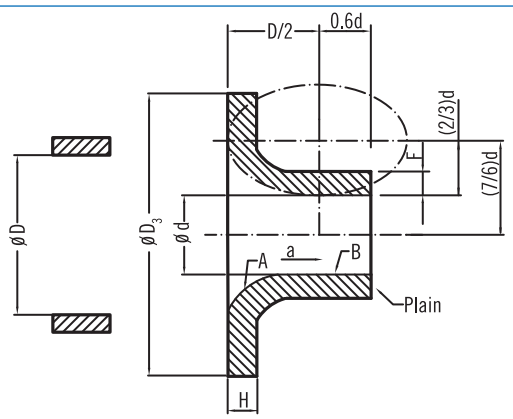

Low ratio $0.2 \leqq \beta \leqq 0.5$

* A: convergent section
B: throat

Flow Nozzle Series

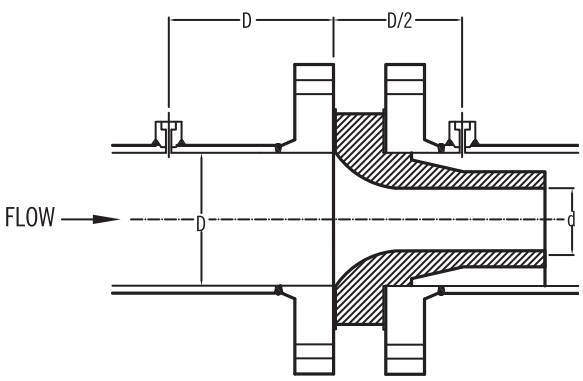

Wafer Type-Typical Nozzle
Model: NF

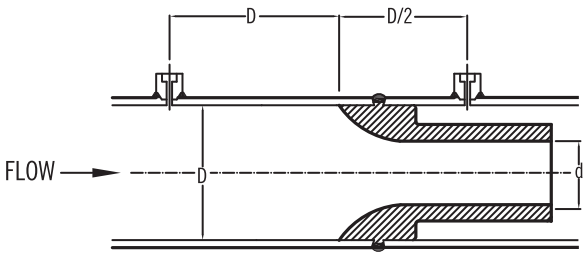

Welded-In Type-Flow Nozzle
Model: NW

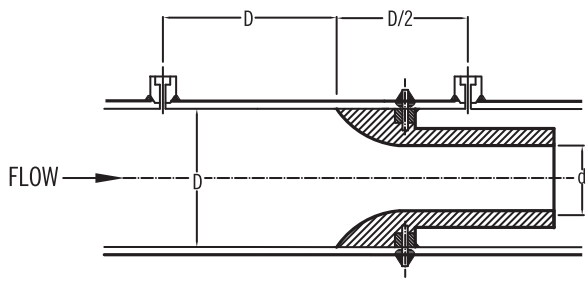

Welded-In with Holding Ring-Type
Model: NWR

WWW.NEW-FLOW.DE | Tel: +49 3682 49099 | Fax: +49 3682 49093 | E-Mail: info@mess-regel.de

Ordering Information

	Individual Specification		Requirement		Requirement	
General						
1	P & ID No.					
2	Line No. / Vessel No.					
3	Line Size					
4	Sched No.					
5	Accuracy					
6	FCFCs Painting or Makers Painting STD					
Flow Nozzle						
7	Nozzle Type					
8	Applied Code or Standard					
9	Nozzle Material					
10	Meter Run					
11	Bore / Diameter Ratio (d/D)					
12	Tap Type					
13	Tap Conn.					
Operating Condition						
14	Fluid & State					
15	Flow Rate: Norm.	Max. (T/Hr)				
16	Press. Norm.	Max. (kg/cm^2G)				
17	Temp. Norm.	Max. (°C)				
18	Specific Gravity / Density					
19	Molecular Weight					
20	Viscosity Range	(Cp)				
21	Compression Factor					
22	Ratio of Spec. Heat	(Cp/Cv)				
23	Measuring Range	(T/H)				
24	Diff. Press. Range	(mmH_2O)				
25	Total Length					
26	Q'ty					
27	Tag No.					

* Please fill in above block on request.

WWW.NEW-FLOW.DE | Tel: +49 3682 49099 | Fax: +49 3682 49093 | E-Mail: info@mess-regel.de