SANITARY BALL VALVES – Without Mounting Pad

N-3H-B – BUTT WELD ENDS N-3H-C – T-CLAMP

Technical Data

Full Port, 3 piece type- Inside port finish Ra≤0.4
Material: Wetted parts ASTM A351 CF8M / 316
Connection Size: ½"(15mm), ¾"(20mm), 1"(25mm), 1½"(40mm), 2"(50mm), 2½"(65mm), 3"(80mm), 4"(100mm)
Connection Type: Clamp & Tube butt weld ends available
Locking Device: Valve operated locking in open or closed position
Working Temperature Limited: -20°F ~ 350°F (-5°C ~ 175°C)
Wokring Pressure Limited: 1000psi (70kg/cm²) for ½"~1";
800psi (56kg/cm²) for 1½"~2";
600psi (42kg/cm²) for 2½"~4"
Valves inspected and tested according to **API 598 standard**.



N-3H-C



N-3H-B

Dimensions

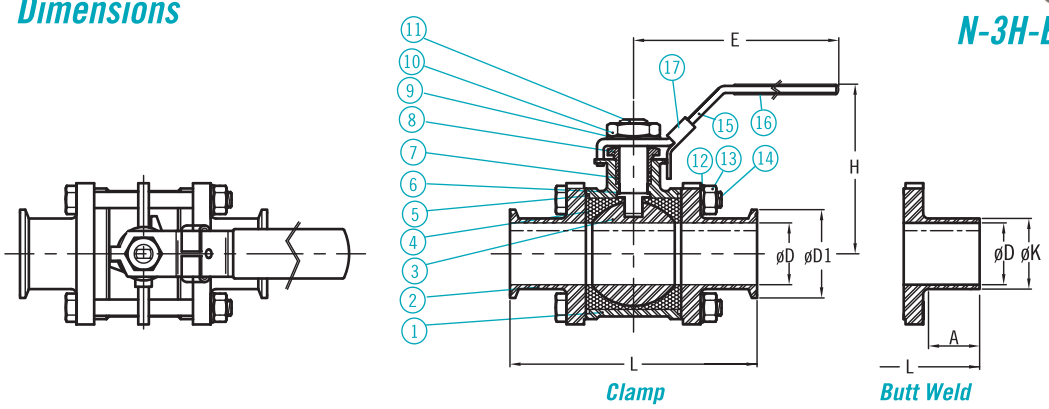

Clamp Butt Weld

unit=mm

mm	Size inch	øD±0.5	øD1	øK	A	L±1.0	H±3.0	E±3.0	TURTEQ inch/Lbs
15	½	9.5	25.4	12.7	18	89	52	106	40
20	¾	15.9	25.4	19.1	21	101	55	106	64
25	1	22.2	50.4	25.4	25	114	70	135	130
40	1½	35.0	50.4	38.2	28	140	89	182	195
50	2	47.6	63.6	50.8	25	156	97	182	250
65	2½	60.2	77.5	63.4	35	197	140	263	400
80	3	73.0	90.8	76.2	43	229	152	263	600
100	4	97.4	118.5	101.6	37	241	184	263	1200

Parts List

Item	Parts Name	Material
1	Body	ASTM A351 CF8M / 316
2	Cap	ASTM A351 CF8M / 316
3	Ball	ASTM A351 CF8M / 316
4	Seat	PTFE / TFM1600
5	Gasket	PTFE
6	Thrust Washer	PTFE
7	Stem Packing	PTFE
8	Gland Nut	AISI 304
9	Handle Washer	AISI 304

Item	Parts Name	Material
10	Handle Nut	AISI 304
11	Stem	AISI 316
12	Bolt Washer	AISI 304
13	Nut	AISI 304
14	Bolt	AISI 304
15	Handle	AISI 304
16	Plastic Cover	Plastic
17	Locking Device	AISI 304

Pressure–Temperature

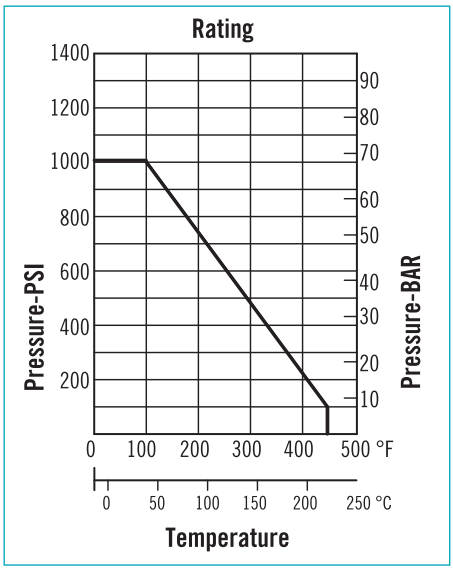

Ordering Information

N-3H	Code	Model
	B	Butt Weld Ends
	C	T-Clamp

Code	Body Material
S	CF8M / SS316

Code	Connection Size
	(A) ½" (B) ¾" (C) 1" (D) 1½"
	(E) 2" (F) 2½" (G) 3" (H) 4"

N-3H				Complete Ordering Code

WWW.NEW-FLOW.DE | Tel: +49 3682 49099 | Fax: +49 3682 49093 | E-Mail: info@mess-regel.de