# METAL TUBE FLOW METER MF200E

## Technical Data

**MF200E for low flow of gas, liquid and steam**
**Material:** 316 stainless steel for case and body.
**Indication:** via magnetic coupling (no seals)
**Scales:** calibrated in l/h, m³/h, kg/h, %
**Flow rate:** water–0.4 l/h up to 6000 l/h
air–21 NL/h up to 150,000 NL/h
**Connection types:** BSP, NPT, flange type on request
**Working Temperature:**
Combine with electronic parts: -40°C~+150°C
Combine without electronic parts: -40°C~+180°C
**Working Pressure:** Standard 100 kg/cm²;
other options upon request
**Connection size:** ¼" ~ 2"
**Protection Class:** IP65
**Accuracy:** ± 2% FS (± 1.6% FS option)







## Principle

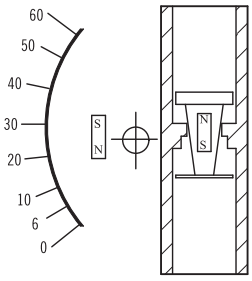


## Standard Scales

| Tube | L/H 20°C Water | NL/H Air 20°C 1.013 bar | ΔPmm Water | BSP /NPT | Accuracy (NOTE 1.) |
|---|---|---|---|---|---|
| MF2001E | 0,4 ~ 4 | 21 ~ 210 | 340 | 1/4" | ±6% F.S |
| MF2002E | 0,6 ~ 6 | 33~330 | 340 | 1/4" | ±3% F.S |
| MF2003E | 1 ~ 10 | 48~480 | 340 | 1/4" | ±2% F.S |
| MF2004E | 1.5 ~ 15 | 60~600 | 340 | 1/4" | ±2% F.S |
| MF2005E | 2 ~ 20 | 72~720 | 340 | 1/4" | ±2% F.S |
| MF2006E | 3 ~ 30 | 90~900 | 340 | 1/4" | ±2% F.S |
| MF2007E | 5 ~ 50 | 120~1200 | 340 | 1/4" | ±2% F.S |
| MF2008E | 6 ~ 60 | 180~1800 | 340 | 1/4" | ±2% F.S |
| MF2009E | 10 ~ 100 | 300~3000 | 340 | 1/4" | ±2% F.S |
| MF2010E | 15 ~ 150 | 500~5000 | 340 | 1/2" | ±2% F.S |
| MF2011E | 25 ~ 250 | 750~7500 | 340 | 1/2" | ±2% F.S |
| MF2012E | 40 ~ 400 | 1200~12000 | 340 | 1/2" | ±2% F.S |
| MF2013E | 60 ~ 600 | 1800~18000 | 340 | 1/2" | ±2% F.S |
| MF2014E | 75~750 | 2000~20000 | 340 | 3/4" | ±2% F.S |
| MF2015E | 100~1000 | 3000~30000 | 340 | 1" | ±2% F.S |
| MF2016E | 150~1500 | 5000~50000 | 450 | 1-1/2" | ±2% F.S |
| MF2017E | 200~2000 | 7500~75000 | 450 | 1-1/2" | ±2% F.S |
| MF2018E | 300~3000 | 9000~90000 | 450 | 1-1/2" | ±2% F.S |
| MF2019E | 350~3500 | 11000~110000 | 450 | 1-1/2" | ±2% F.S |
| MF2020E | 400~4000 | 12000~120000 | 450 | 1-1/2" | ±2% F.S |
| MF2021E | 600~6000 | 15000~150000 | 520 | 2" NPT only | ±2% F.S |

## Dimensions

**Model: MF200E-B**

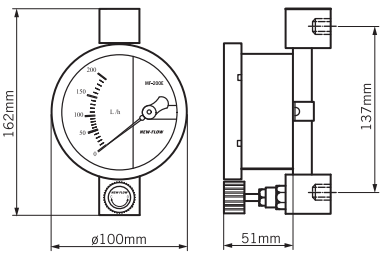


NOTE.
Max. Range: 1000 L/H for Liquid; 30000 NL/H for Air
Connection Size: ¼"~¾"BSP/NPT

**MF200E-B**
Basic Model:
Rear connection + needle valve

**Model: MF200E-S**

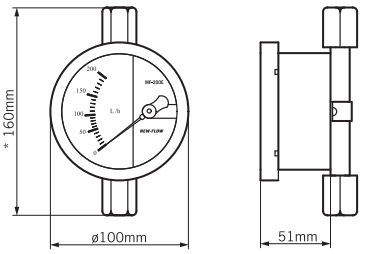


NOTE.
*1½"BSP, C to C =170mm

**MF200E-S**
Basic Model:
Thread connection

**Model: MF200E-R**

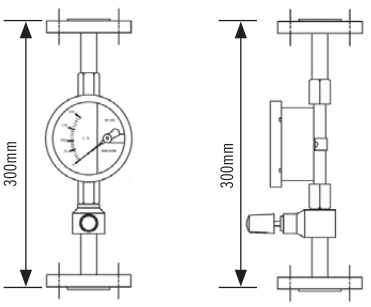


**MF200E-R**
Flange-needle Model:
flange connection + needle valve

**Model: MF200E-T**

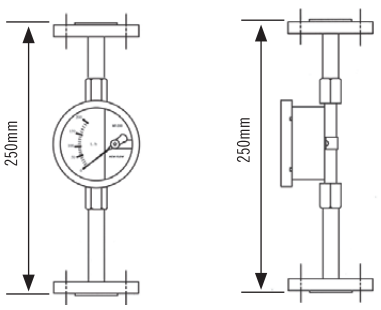


**MF200E-T**
Flange Model:
flange connection

**NOTE.**
1. The accuracy ±6% F.S for tube MF2001E; The accuracy ±3% F.S for tube MF2002E.
The accuracy ±2% F.S for tube MF2003E~MF2021E and option ±1.6% F.S on request.
2. Performance Technical Data are effective with date of issue and are subject to change without prior notice.

WWW.NEW-FLOW.COM • WWW.NEW-FLOW.DE | Tel: +49 3682 49099 | Fax: +49 3682 49093 | E-Mail: info@mess-regel.de

## Installation

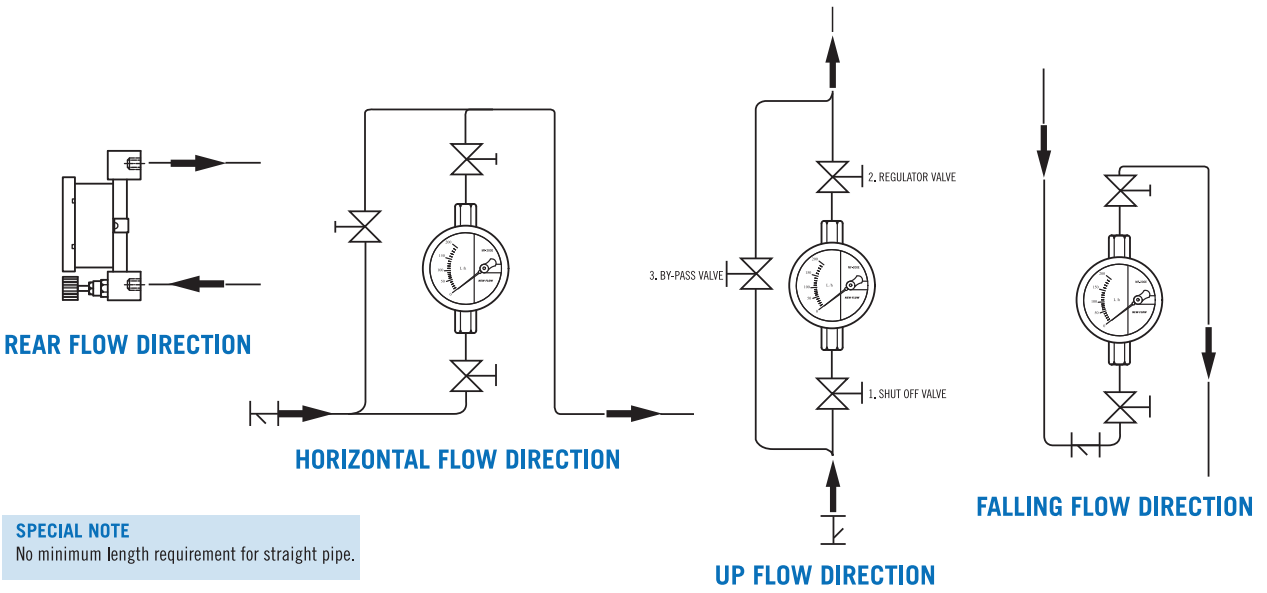


**SPECIAL NOTE**
No minimum length requirement for straight pipe.

## Ordering Information

| MF200E | Code | Connection |
|---|---|---|
| | S | Thread connection |
| | R | Connection with needle valve |
| | T | Flange connection |
| | B | Rear connection with needle valve |

| Code | Type |
|---|---|
| G | Indicating only |

| Code | Alarm |
|---|---|
| 0 | Without alarm switch |

| Code | Body material |
|---|---|
| A | SS316 |

| Code | Float & Wetted part material |
|---|---|
| A | SS316 |

| Code | Connection rating |
|---|---|
| 0 | Thread connection |
| 5 | JIS 5K |
| 10 | JIS 10K |
| 20 | JIS 20K |
| 15 | ANSI 150# |
| 30 | ANSI 300# |
| 40 | ANSI 400# |
| 60 | ANSI 600# |
| T | Other:_____ |
| | |

| Code | Connection size |
|---|---|
| 4B | 1/4" BSP (Female) |
| 4N | 1/4" NPT (Female) |
| 2B | 1/2" BSP (Female) |
| 2N | 1/2" NPT (Female) |
| 6B | 3/4" BSP (Female) |
| 6N | 3/4" NPT (Female) |
| 1B | 1" BSP (Female) |
| 1N | 1" NPT (Female) |
| 15B | 1½" BSP (Female) |
| 15N | 1½" NPT (Female) |
| 20B | 2" BSP (Female) |
| 20N | 2" NPT (Female) |
| 2F | ½" Flange |
| 6F | ¾" Flange |
| 10F | 1" Flange |
| 15F | 1 ½" Flange |
| 20F | 2" Flange |

| Code | Protection Class |
|---|---|
| IP | IP65 |

| Code | Fluid |
|---|---|
| G | Gas |
| O | Oil |
| L | Liquid |
| S | Steam |

| Code | Range |
|---|---|
| S | Standard range |
| | Please directly fill out the flow range in the order code. |

| MF200E | | | | | | | + | | | | | Complete ordering code |
|---|---|---|---|---|---|---|---|---|---|---|---|---|

**NOTE:**
1. Custom-made flow range and flange size upon request.
2. Please fill in the ordering information and service condition, and fax this sheet along with your inquiry to 886-7-8225588.

**Special instruction, if any:**

_____

_____

_____

**Service Condition:**

Fluid name: _____

Sp. Gr. (density): _____

Viscosity: _____

Press.: _____

Temp.: _____

Full scale: _____

WWW.NEW-FLOW.DE | Tel: +49 3682 49099 | Fax: +49 3682 49093 | E-Mail: info@mess-regel.de