VERTICAL MAGNETIC LEVEL SWITCH

LT205 – WEATHER PROOF LXT205 – EXPLOSION PROOF



Technical Data

Enclosure housing: Explosion proof- EEx d II C T6; Weather proof- IP65
Process connection: 1½"~3" Flange type
Flange rating: JIS, ANSI, DIN available
Material: Wetted parts 316 stainless steel
Pressure limits: 3.0 MPa (30 kg/cm²) for ø40 float; option: up to 4.5 MPa
2.0 MPa (20 kg/cm²) for ø50 float
Float working specific gravity: ≥0.7 (option: less than 0.7 available on request)
Temperature limits: -20°C to +150°C (-20°C to +350°C only for LTH & LXTH)
Switch function: Micro switch 1 x SPDT; 2 x SPDT option
Switch rating: 3A/250VAC, 3A/30VDC, 0.4A/125VDC
Conduit connection: ½"NPT, ¾"NPT female, option available

Head Type

IP65

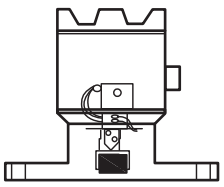

LT-205

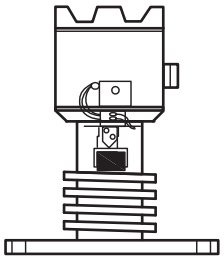

LTH

Explosion Proof

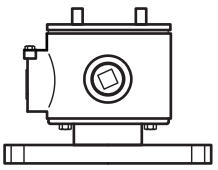

LXT-205

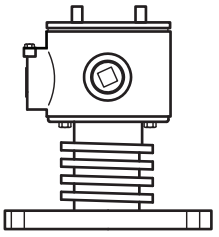

LXTH

*LTH & LXTH for high temperature.

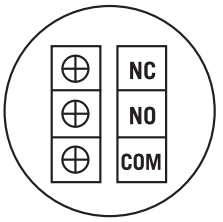

Wire Drawing

Dimensions

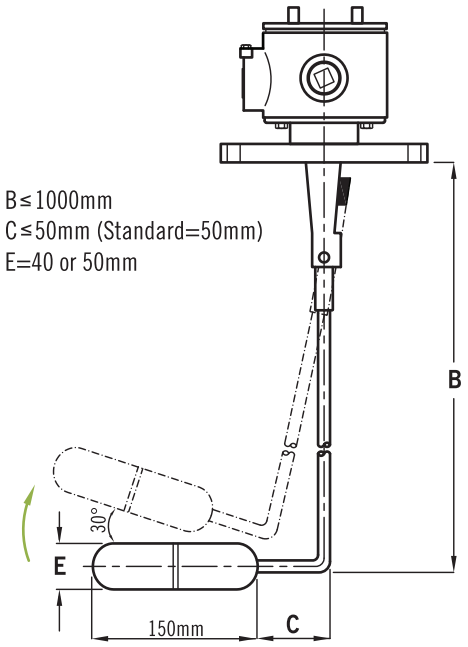

Ordering Information

Model	LT205	LXT205	LTH	LXTH

Code	Process Connection Size		
1	1½" (ø50 not available)	2	2"
3	3"	0	option (please specify size)

Code	Process Connection Rating
	(A) JIS10K (B) JIS20K (C)ANSI 150# (D)ANSI 300#
	(E)PN16 (F)PN25 (G)option

Code	Conduit Connection Size
	(1) ½"NPT (2) ¾"NPT (3) Option

Code	Flange Material
	(1) SS316 (2) SS304 (3) Option

Code	Float Arm Length		
C	50mm (standard)	0	option
B	Please fill in the request length		

Code	Switch Function-Micro Switch
1	One switch, SPDT x 1
2	Two switch, SPDT x 2

							Complete Ordering Code

WWW.NEW-FLOW.DE | Tel: +49 3682 49099 | Fax: +49 3682 49093 | E-Mail: info@mess-regel.de