HORIZONTAL MAGNETIC LEVEL SWITCH

LT202 Flange Type SQUARE FLANGE

LT202 float-operated level switches are suitable for controlling liquid level at horizontal mounting. The float equipped with an extended arm moves a couple magnetic mechanism to actuate a microswitch to offer an ON-OFF contact for application.

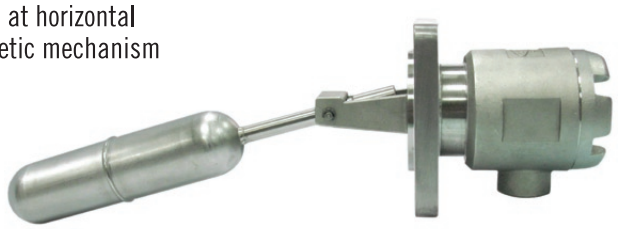

Technical Data

Enclosure housing: Weather proof IP65
Material: Wetted parts SS316 or SS304
Temperature limits: -20°C to +150°C
Pressure limits: 3.0 MPa (30 kg/cm²), option: up to 4.5 MPa
Switch function: Micro switch 1 x SPDT; 2 x SPDT option
Switch rating: 3A/250VAC, 3A/30VDC, 0.4A/125VDC
Conduit connection: ½"NPT female, option
Float working specific gravity: ≥0.7
(option: less than 0.7 available on request)

Dimensions

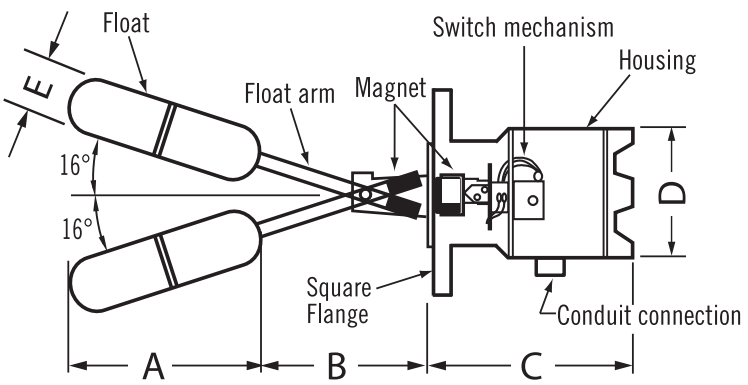

unit=mm

A	B	C	D	E
150	92	102 Approx.	64	40

NOTE.
1. Special dimensions on request.
2. Extension length for **B** is avaialble.

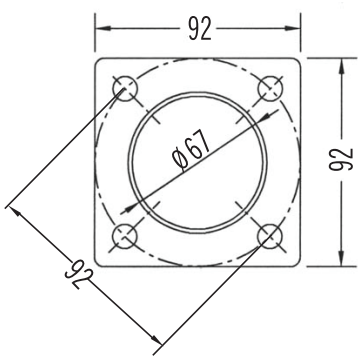

Square Flange

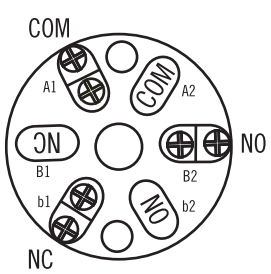

Wire Drawing

Accessory-Test Device

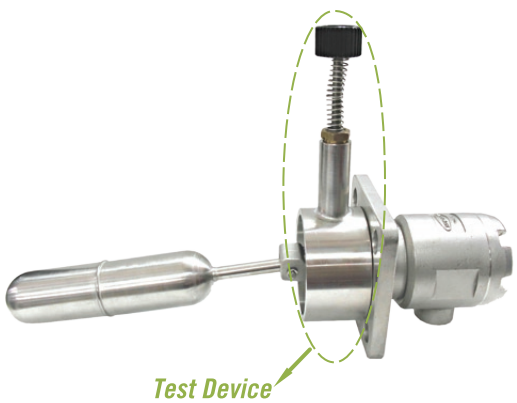

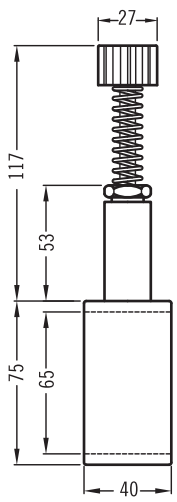

NOTE.
Please advise us if you require the test device.

unit=mm

Ordering Information

LT202	Code	Type		
	S	Standard type	T	With test device

Code	Square Flange Material
	(1) SS316 (2) SS304 (3) option

Code	Switch Function- Micro Switch		
1	One switch, SPDT x 1	2	Two switch, SPDT x 2

LT202				Complete Ordering Code

WWW.NEW-FLOW.DE | Tel: +49 3682 49099 | Fax: +49 3682 49093 | E-Mail: info@mess-regel.de