PADDLE WHEEL LIQUID FLOW METER

HF200

Technical Data

Connecting size: 1½"NPT female standard
Power supply: 3.8V to 30VDC
Output: Sink(NPN)
Material: Body-polypropylene
Cover,PP,PTFE available
Rotor-PVDF
Shaft-HC276
Bearings-PVDF
O-ring: Viton
Max.temperature: 70℃
Max.pressure: Polypropylene and PTFE-10kg/cm²
PVDF-15kg/cm²
Accuracy: ±2%F.S



Dimensions

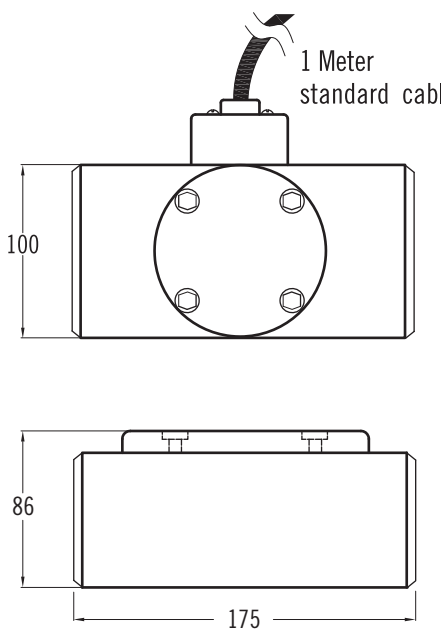

unit=mm

Range Table

Size	Flow Rates /M³H	Nominal Factors Per Liter
1½"	1~10	7.1

Pressure Drop: 1½"

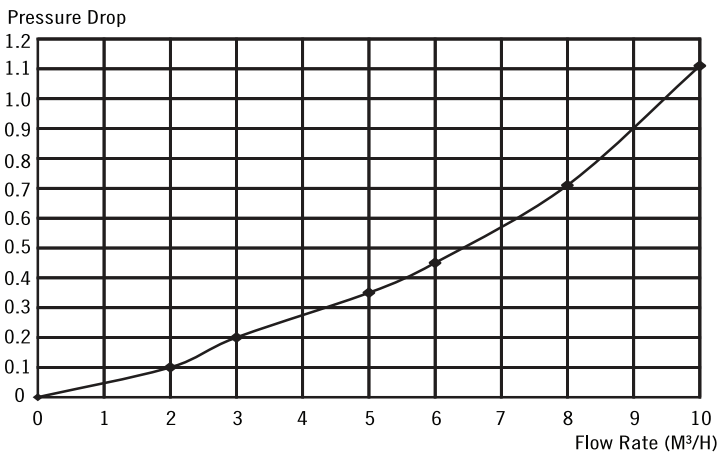

Ordering Information

HF200	Code	Process connection size		
		(1) 1½"		
	Code	Body material		
	A	Polypropylene	B	PVDF
	Code	Cove Material		
		(1) P.P (2) PVDF		
HF200				Complete ordering code

WWW.NEW-FLOW.DE | Tel: +49 3682 49099 | Fax: +49 3682 49093 | E-Mail: info@mess-regel.de