TEMPERATURE SWITCH EXPLOSION PROOF

ETS5000



CLASS I, GROUPS B, C & D,
CLASS II, GROUPS E, F & G NEMA 4,7,9
Temperature: -200 ~ +650°C
Dial Size: 6"

Technical Data

Type	Liquid Filled Type	Gas Filled Type
Model	ETS5000-L	ETS5000-G
Temperature Range	-70~+400°C	-200~650°C
Remote capillary length	30M	50M
Electric contact	1~2 contacts	
Microswitch type S.P.D.T.	AC 125/250V 5 A DC 125/250V 0.5/0.25A	
Explosion proof class	Class I, Gr. B, C & D; Class II, Gr. E, F & G NEMA 4,7,9	
Material of case & cover	Aluminum alloy die-casting, blue color	
Gauge indication accuracy	±1% F.S	
Switch acting differential	±1.6~3% F.S	
Contact adjusting method	Internal adjusting method	
Conduit connection	¾" NPT(F)	
Process connection	½" or ¾" NPT Male	
Sensor material	wetted parts are all in SS316	

Minimum Inserting Length of Sensor Bulb

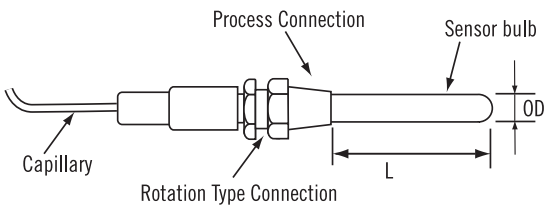

Dimensions

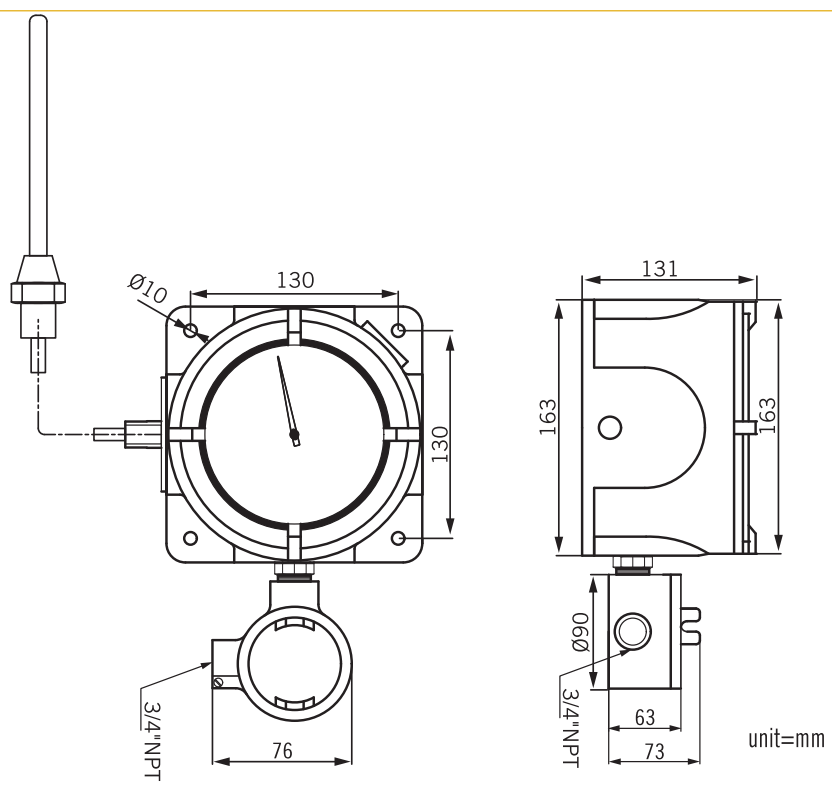

WWW.NEW-FLOW.DE | Tel: +49 3682 49099 | Fax: +49 3682 49093 | E-Mail: info@mess-regel.de

Range Selection Table

Liquid Filled Type		
Adjustable Range (°C)		Sub Division
1	-70~+50	2
2	-50~+50	1
3	-30~+50	1
4	-30~+100	2
5	-10~+50	1
6	-10~+100	1
7	0~50	1
8	0~60	1
9	0~80	1
10	0~100	1
11	0~120	2
12	0~150	2
13	0~200	2
14	0~250	5
15	0~300	5
16	0~400	5

Gas Filled Type		
Adjustable Range (°C)		Sub Division
1	-200~+50	5
2	-200~+100	5
3	-200~+150	5
4	-200~+200	5
5	-100~+100	2
6	-100~+150	5
7	-100~+200	5
8	-50~+300	5
9	-50~+400	10
10	-50~+500	10
11	-50~+600	10
12	0~100	1
13	0~150	2
14	0~200	2
15	0~250	5
16	0~300	5
17	0~400	5
18	0~500	10
19	0~650	10

OPTION.

1. Special range available upon reuqest.
2. Special scale available upon request.
3. Special stem diameter and length available upon reuqest.

Effective Bulb Insertion Length

Liquid Filled Type					
Range °C \ Outside Dimension d		Ø6	Ø8	Ø10	Ø12
1	-70~+50	130	90	80	80
2	-50~+50	156	100	90	90
3	-30~+50	195	110	90	90
4	-30~+100	120	90	80	80
5	-10~+50	260	120	110	110
6	-10~+100	142	90	80	80
7	0~50	312	140	120	120
8	0~60	312	140	120	120
9	0~80	195	110	90	90
10	0~100	156	100	90	90
11	0~120	130	90	80	80
12	0~150	104	80	70	70
13	0~200	78	80	70	70
14	0~250	63	80	70	70
15	0~300	53	80	70	60
16	0~400	39	70	60	60

Gas Filled Type					
Capillary Length \ Outside Dimension d		Ø6	Ø8	Ø10	Ø12
1	0~10m	150	100	80	80
2	11~30m	200	150	130	130
3	31~50m	250	200	180	180

Ordering Information

ETS5000L ETS5000G	Code	Measuring Range
		Please refer to the range selection table. e.g. 1 = Range is -70~+50°C

Code	Capillary Length (M)
	Please fill in the requested length.

Code	Process Connection
	(A) ½" NPT Male (B) ¾" NPT Male (O) option

Code	Stem Outside Dimensions
	(1) Ø6mm (2) Ø8mm (3) Ø10mm (4) Ø12mm (5) option

Code	Stem Length (mm)
	Please refer to bulb length table. Fill in the requested length.

Code	Micro Switch
1	One setting point SPDT x 1
2	Two setting point SPDT x 2

							Complete Ordering Code

WWW.NEW-FLOW.DE | Tel: +49 3682 49099 | Fax: +49 3682 49093 | E-Mail: info@mess-regel.de