TEMPERATURE SWITCH WEATHER PROOF TYPE
ETS3000W SERIES

NEMA 4, 4X, IP65
Temperature: -200 ~ +650°C



ETS3000W-C
(Capillary Type)

ETS3000W-B
(Bottom ConnectionType)

Technical Data

Type	Liquid Filled Type	Gas Filled Type
Temperature Range	-70~+400°C	-200~650°C
Remote capillary length	20M max.	30M max.
Electric contact	1~2 contacts	
Microswitch type S.P.D.T.	Nominal operating voltage: 250 VAC max. Current: 5A max.	
Alternatively switch data	Nominal operating voltage: 28 VDC max. Current: 5A max.(ohmic load); 3A max. (inductive load) Contact material: Pure silver 999.9 Ambient temperature: -20°C ~ +70°C	
Weather proof class	NEMA 4, 4X, IP65	
Material of case & cover	Aluminum alloy die-casting	
Switch acting differential	±1.6~3% of F.S.	
Contact adjusting method	Internal adjusting method	
Conduit connection	½" NPT(F)	
Process connection	½" or ¾" NPT Male	
Sensor material	wetted parts are all in SS316	

Dimensions

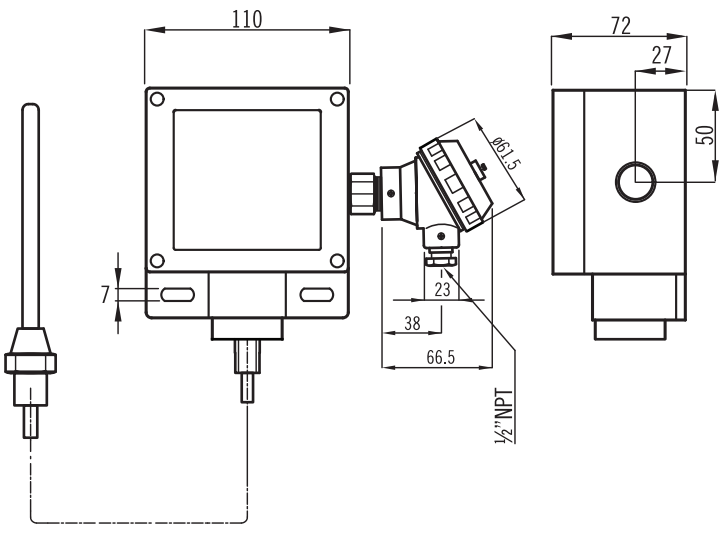

Minimum Inserting Length of Sensor Bulb

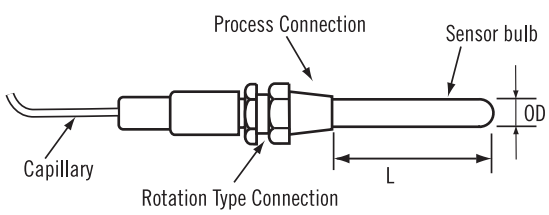

WWW.NEW-FLOW.DE | Tel: +49 3682 49099 | Fax: +49 3682 49093 | E-Mail: info@mess-regel.de

Range Selection Table

Liquid Filled Type	
Item	**Adjustable Range (°C)**
1	-70~+50
2	-50~+50
3	-30~+50
4	-30~+100
5	-10~+50
6	-10~+100
7	0~50
8	0~60
9	0~80
10	0~100
11	0~120
12	0~150
13	0~200
14	0~250
15	0~300
16	0~400

Gas Filled Type	
Item	**Adjustable Range (°C)**
1	-200~+50
2	-200~+100
3	-200~+150
4	-200~+200
5	-100~+100
6	-100~+150
7	-100~+200
8	-50~+300
9	-50~+400
10	-50~+500
11	-50~+600
12	0~100
13	0~150
14	0~200
15	0~250
16	0~300
17	0~400
18	0~500
19	0~650

OPTION.

1. Special range available upon reuqest.
2. Special scale available upon request.
3. Special stem diameter and length available upon reuqest.

Effective Bulb Insertion Length

Liquid Filled Type					
Range °C \ Outside Dimension d		Ø6	Ø8	Ø10	Ø12
1	-70~+50	130	90	80	80
2	-50~+50	156	100	90	90
3	-30~+50	195	110	90	90
4	-30~+100	120	90	80	80
5	-10~+50	260	120	110	110
6	-10~+100	142	90	80	80
7	0~50	312	140	120	120
8	0~60	312	140	120	120
9	0~80	195	110	90	90
10	0~100	156	100	90	90
11	0~120	130	90	80	80
12	0~150	104	80	70	70
13	0~200	78	80	70	70
14	0~250	63	80	70	70
15	0~300	53	80	70	60
16	0~400	39	70	60	60

Gas Filled Type					
Capillary Length \ Outside Dimension d		Ø6	Ø8	Ø10	Ø12
1	0~10m	150	100	80	80
2	11~30m	200	150	130	130

Ordering Information

Model	Type
ETS3000W-B	Bottom Connection Type
ETS3000W-C	Capillary Type

Code	Measuring Range
	Please refer to the range selection table. e.g. 1 = Range is -70~+50°C

Code	Capillary Length (M)		
	Please fill in the requested length.	0	only for ETS3000W-B

Code	Process Connection
A	(A) ½" NPT Male (B) ¾" NPT Male (O) option

Code	Stem Outside Dimensions
	(1) Ø6mm (2) Ø8mm (3) Ø10mm (4) Ø12mm (5) option

Code	Stem Length (mm)
	Please refer to bulb length table. Fill in the requested length.

Code	Micro Switch
1	One setting point SPDT x 1
2	Two setting point SPDT x 2

							Complete Ordering Code

WWW.NEW-FLOW.DE | Tel: +49 3682 49099 | Fax: +49 3682 49093 | E-Mail: info@mess-regel.de