THREAD TYPE DIAPHRAGM SEAL

DT111

DT-101 diaphragm seal is designed to be used in highly viscous process media such as pulp, paper, waste water treatment and plastics and chemical process industries. It is easy to assemble with pressure gauges, pressure switches, and pressure instruments.



Technical Data

Instrument connection: female thread ¼" to ½" BSP or NPT
Process connection: ¼" to ½" Thread BSP or NPT
Temperature limited: -40~+150℃ , cooling element or capillary line up to 350℃
Pressure range limited: Maximum up to 60 kg/cm²
Minimum 0~10 kg/cm², option 0~250 kg/cm²
Material: upper & lower housing-SS316 (standard), others on request
Membrane: SS316L (standard); Options– Hastelloy C276, tantalum and others on request.

Dimensions

Item	Description of Parts
a	Upper housing
b	Lower housing
c	Membrane
d	Instrument connection
e	Filling port
f	Process connection
g	Bolt

NOTE
Performance Technical Data are effective with date of issue and are subject to change without prior notice.

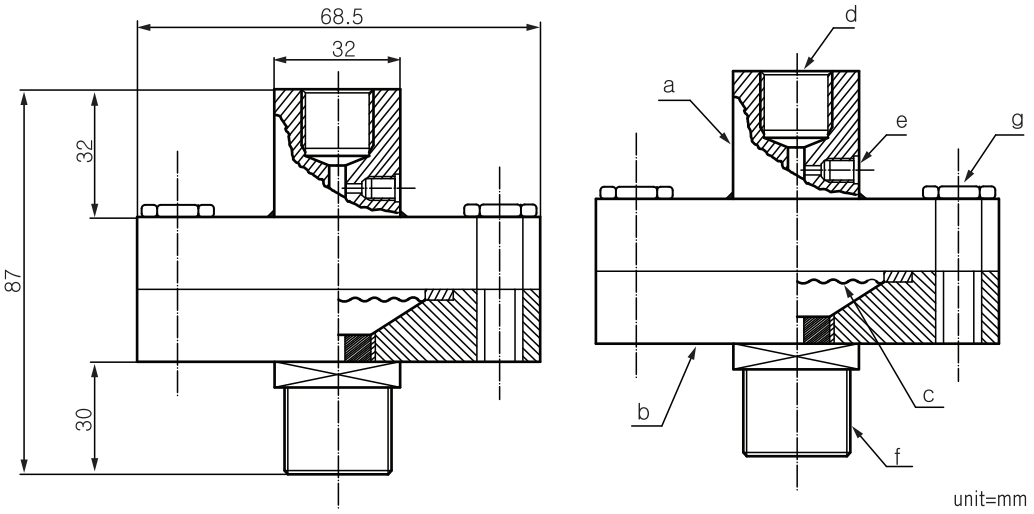

unit=mm

Ordering Information

DT111	Code	Instrument Connection (Female)
		(A) ¼"BSP (B) ¼"NPT (C) ⅜"BSP (D) ⅜"NPT (E) ½"BSP (F) ½"NPT
	Code	Process connection (Male)
		(1) ¼" BSP (2) ¼" NPT (3) ⅜"BSP (4) ⅜"NPT (5) ½"BSP (6) ½"NPT (7) Option
		Code — Upper housing material
		(S) SS316(standard) (0) Option
		Code — Lower housing material
		(S) SS316(standard) (0) Option
		Code — Membrane material
		(1) SS316L (2) Hastelloy C276 (3) Tantalum (4) Option

DT111						Complete ordering code

WWW.NEW-FLOW.DE | Tel: +49 3682 49099 | Fax: +49 3682 49093 | E-Mail: info@mess-regel.de