PLASTIC TUBE FLOW METER BPF300

Technical Data

BPF300 for high flows of gas and liquid
Case material: SS316; Aluminum alloy available
Body wetted parts material: in PVC, CPVC, PVDF
indication via magnetic coupling (no sealed)
Scales calibrated: in l/h, m³/h, kg/h, %, etc.
Flow rates for: – Water: 4 l/h up to 15,000 l/h (SS316 float)
4 l/h up to 8,000 l/h (PVDF float)
(special ranges on request)
– Air: 0.1 Nm³/h up to 450 Nm³/h
Connection size: Thread ½"~2½"NPT or BSP available
Mounting length: 250mm, standard or others
Protection class: IP65
Accuracy: ±5% F.S for tube BPFS3001~BPFS3003;
±2% F.S for tube BPFS3004~BPFS3026; option ±1.6% F.S on reuqest
Max. working pressure: 20 kg/cm² (PVDF); 15 kg/cm² (PP & PVC)
Max. working temperature: PVC–0~40°C; PP–0~60°C;
PVDF–-30°C~100°C
Adjustable micro switch: 1 adjustable alarm contact
Load: 5A/250VAC/125VAC/30VDC
Temperature: -25°C~+100°C (AMB)
Hysteresis: ±10% F.S (Dead Band)
Electric transmitter: Analog output available 4~20mA (2 wire)
No alarm switch available
Power supply: 24VDC
Temperature: -25°C~+50°C (AMB)



Dimensions

Case Material: SS316
Case Type: Round Bayonet Ring Type
Only for indicating type

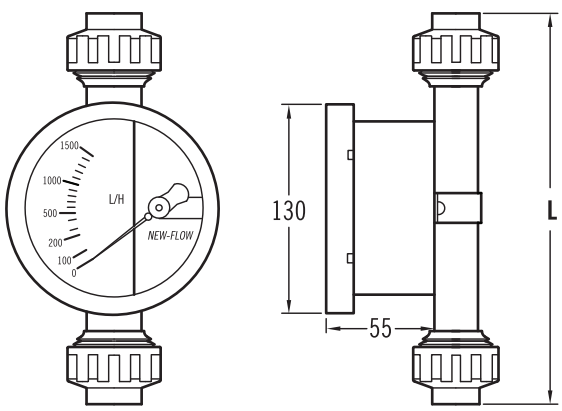

Case Material: Aluminum alloy and SS316 available
Case Type: Round Screw Tight type
For MS and GT type

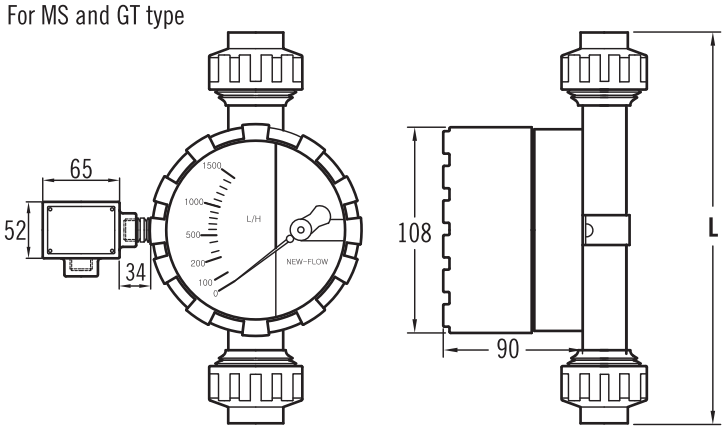

L: Standard 250mm
Other please refer to the *Standard Sceles*

unit=mm

Principle

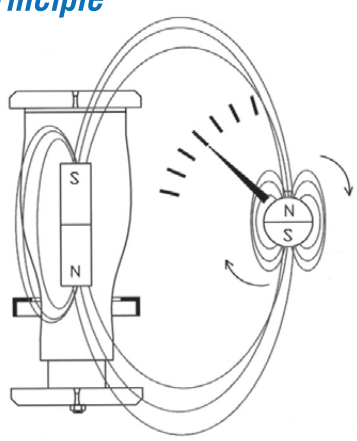

WWW.NEW-FLOW.DE | Tel: +49 3682 49099 | Fax: +49 3682 49093 | E-Mail: info@mess-regel.de

Standard Scales

A. Float Material: SS316

Tube	L/H 20°C Water	NM^3/H Air 20°C 1.013bar	PmmWater	Thread Connection	Thread Type L (mm)	Accuracy (NOTE 1.)
BPFS3001	4 ~ 30	0.1 ~ 1	≤750	1/2"	221	±5% F.S
BPFS3002	4 ~ 40	0.13 ~ 1.3	≤750	1/2"	221	±5% F.S
BPFS3003	5.5 ~ 55	0.17 ~ 1.7	≤750	1/2"	221	±5% F.S
BPFS3004	8 ~ 80	0.2 ~ 2	≤750	1/2"	221	±2% F.S
BPFS3005	16 ~ 160	0.5 ~ 5	≤750	1/2"	221	±2% F.S
BPFS3006	18 ~ 180	0.6 ~ 6	≤750	1/2"	221	±2% F.S
BPFS3007	30 ~ 300	1 ~ 10	≤750	1/2"	221	±2% F.S
BPFS3008	50 ~ 500	1.5 ~ 15	≤750	1/2"	221	±2% F.S
BPFS3009	60 ~ 600	1.8 ~ 18	≤750	1/2"	221	±2% F.S
BPFS3010	70 ~ 700	2 ~ 20	≤750	1/2"	221	±2% F.S
BPFS3011	100 ~ 1000	3 ~ 30	≤750	1/2"	235	±2% F.S
BPFS3012	120 ~ 1200	4 ~ 40	≤750	1/2"	235	±2% F.S
BPFS3013	160 ~ 1600	5 ~ 50	≤700	3/4"	250	±2% F.S
BPFS3014	200 ~ 2000	6 ~ 60	≤700	3/4"	250	±2% F.S
BPFS3015	240 ~ 2400	7 ~ 70	≤700	3/4"	250	±2% F.S
BPFS3016	280 ~ 2800	8.5 ~ 85	≤700	3/4"	250	±2% F.S
BPFS3017	320 ~ 3200	9 ~ 90	≤700	3/4"	250	±2% F.S
BPFS3018	350 ~ 3500	10 ~ 100	≤700	3/4"	250	±2% F.S
BPFS3019	500 ~ 5000	14 ~ 140	≤650	1" & 1½"	270	±2% F.S
BPFS3020	600 ~ 6000	15 ~ 150	≤650	1" & 1½"	270	±2% F.S
BPFS3021	700 ~ 7000	20 ~ 200	≤650	1" & 1½"	270	±2% F.S
BPFS3022	800 ~ 8000	24 ~ 240	≤650	1" & 1½"	270	±2% F.S
BPFS3023	1000 ~ 10000	30 ~ 300	≤650	2"	306	±2% F.S
BPFS3024	1200 ~ 12000	35 ~350	≤650	2"	306	±2% F.S
BPFS3025	1400 ~ 14000	40 ~ 400	≤650	2"	306	±2% F.S
BPFS3026	1500 ~ 15000	45 ~ 450	≤1000	2"	306	±2% F.S

NOTE.

1. Accuracy±5% F.S: BPFS3001~BPFS3003
   Accuracy±2% F.S: BPFS3004~BPFS3026
   and option ±1.6% F.S on request.
2. Performace Technical Data are effective with date of issue and are subject to change without piror notice.

B. Float Material:PVDF

Tube	L/H 20°C Water	NM^3/H Air 20°C 1.013bar	PmmWater	Thread Connection	Thread Type L (mm)	Accuracy (NOTE 1.)
BPFP3001	4 ~ 40	0.1 ~ 1	≤750	1/2"	221	±5% F.S
BPFP3002	5.5 ~ 55	0.17 ~ 1.7	≤750	1/2"	221	±5% F.S
BPFP3003	8 ~ 80	0.2 ~ 2	≤750	1/2"	221	±5% F.S
BPFP3004	16 ~ 160	0.5 ~ 5	≤750	1/2"	221	±2% F.S
BPFP3005	28 ~ 280	0.9 ~ 9	≤750	1/2"	235	±2% F.S
BPFP3006	35 ~ 350	1.1 ~ 11	≤750	1/2"	235	±2% F.S
BPFP3007	40 ~ 400	1.3 ~ 13	≤750	1/2"	235	±2% F.S
BPFP3008	50 ~ 500	5 ~ 50	≤750	3/4"	250	±2% F.S
BPFP3009	70 ~ 700	6 ~ 60	≤700	3/4"	250	±2% F.S
BPFP3010	90 ~ 900	7 ~ 70	≤700	3/4"	250	±2% F.S
BPFP3011	100 ~ 1000	8.5 ~ 85	≤700	3/4"	250	±2% F.S
BPFP3012	120 ~ 1200	9 ~ 90	≤700	3/4"	250	±2% F.S
BPFP3013	160 ~ 1600	10 ~ 100	≤700	3/4"	250	±2% F.S
BPFP3014	200 ~ 2000	14 ~ 140	≤700	3/4"	250	±2% F.S
BPFP3015	250 ~ 2500	15 ~ 150	≤650	3/4"	250	±2% F.S
BPFP3016	300 ~ 3000	20 ~ 200	≤650	1"&1½"	270	±2% F.S
BPFP3017	350 ~ 3500	24 ~ 240	≤650	1"&1½"	270	±2% F.S
BPFP3018	450 ~ 4500	30 ~ 300	≤650	1"&1½"	270	±2% F.S
BPFP3019	450 ~ 4500	35 ~ 350	≤650	1"&1½"	270	±2% F.S
BPFP3020	500 ~ 5000	40 ~ 400	≤650	1"&1½"	270	±2% F.S
BPFP3021	650 ~ 6500	45 ~ 450	≤650	2"	306	±2% F.S
BPFP3022	700 ~ 7000	----------	≤650	2"	306	±2% F.S
BPFP3023	800 ~ 8000	----------	≤650	2"	306	±2% F.S

WWW.NEW-FLOW.DE | Tel: +49 3682 49099 | Fax: +49 3682 49093 | E-Mail: info@mess-regel.de

Alarm / Analog output

BPF300-MS (Micro Switch)

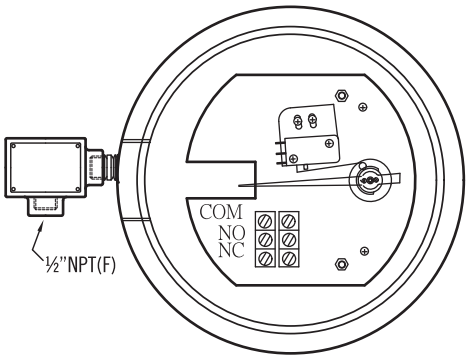

Adjustable Micro Switch, Series BPF300-MS
1 Adjustable alarm contact
Load: 5A/250VAC/125VAC/30VDC
Temperature: -25°C ~ +100°C (AMB)
Hysteresis: ±10% F.S (Dead Band)
Conduit connection: ½"NPT female; others on request

BPF300-GT (Analog Output)

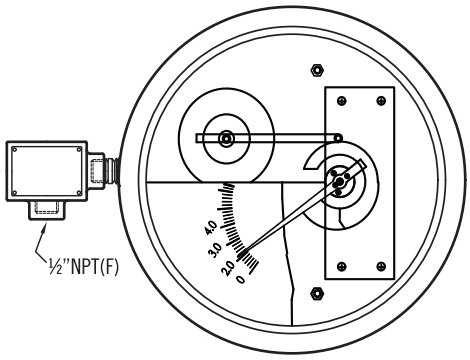

Electric Transmitter, Series BPF300-GT
Analog output available: 4~20mA (2 wire)
No Alarm Switch Available
Temperature: -25°C ~ +100°C (AMB)
Power Supply: 24Vdc
Conduit connection: ½"NPT female; others on request

Ordering Information

BPF300	Code	Type
	G	Indicating only
	MS	Indicating + Switch
	GT	Indicating + 4~20mA (no alarm switch available)

Code	Switch
0	Without alarm switch
M1	One micro switch

Code	Body & wetted parts
A	PVC, standard
B	PP
C	PVDF
D	option

Code	Float material
A	SS316
B	SS316L
C	PVDF
D	option

Code	Connection rating
0	Thread connection

Code	Connection size
2B	1/2" BSP (Female)
2N	1/2" NPT (Female)
6B	3/4" BSP (Female)
6N	3/4" NPT (Female)
10B	1" BSP (Female)
10N	1" NPT (Female)
12B	1½" BSP (Female)
12N	1½" NPT (Female)
20B	2" BSP (Female)
20N	2" NPT (Female)

Code	Protection Class
IP	IP65

Code	Fluid
G	Gas
L	Liquid

Code	Range
S	Standard range
	Please directly fill out the flow range in the order code.

BPF300						+					Complete ordering code

NOTE:
1. Custom-made flow range and flange size upon request.
2. Please fill in the ordering information and service condition, and fax this sheet along with your inquiry to 886-7-8225588.

Special instruction, if any:

_____
_____
_____

Service Condition:

Fluid name: _____
Sp. Gr. (density): _____
Viscosity: _____
Press.: _____
Temp.: _____
Full scale: _____

WWW.NEW-FLOW.DE | Tel: +49 3682 49099 | Fax: +49 3682 49093 | E-Mail: info@mess-regel.de